WATERLOO

Waterloo Low-Profile Wall-Mount Pre-Rinse Faucet with 8" Centers and 12" Add-On Faucet

#750CPRWL812

Item #: 750CPRWL812 Qty: _____

Project: _____

Approval: _____ Date: _____

Features

- **Low-profile 23" hose with 1.15 GPM spray valve**
- **Wall-mounted design with 8" adjustable centers and 1/2" NPT inlets**
- **Quarter-turn ceramic cartridges and check valves for high performance**
- **Heavy-duty faucet base and spray valve with chrome-plated brass construction**
- **Includes 12" add-on faucet (1.8 GPM), 10" riser, and 6" wall bracket**

Certifications

CSA, US and Canada

Certified by NSF

1/2" Water Connection

Technical Data

Hose Length	23 Inches
Faucet Height	24 Inches
Add-On Faucet	12 Inches
Add-on Flow Rate	1.8 GPM
Add-On Type	Swing
Cartridge Type	Ceramic
Faucet Centers	8 Inches
Features	Low Profile NSF Certified
Finish	Chrome

© 2026 Waterloo

Technical Data	
Handle Type	Lever
Material	Brass
Mounting Style	Wall Mounted
Mounting Type	Adjustable
Pre Rinse Unit Type	Mini Pre-Rinse Faucets
Spout Connection Size	1"-20 UNEF
Spray Valve Flow Rate	1.15 GPM
Temperature Rating	180 Degrees F
Thread Type	NPT
Water Inlet Size	1/2 Inches

Plan View

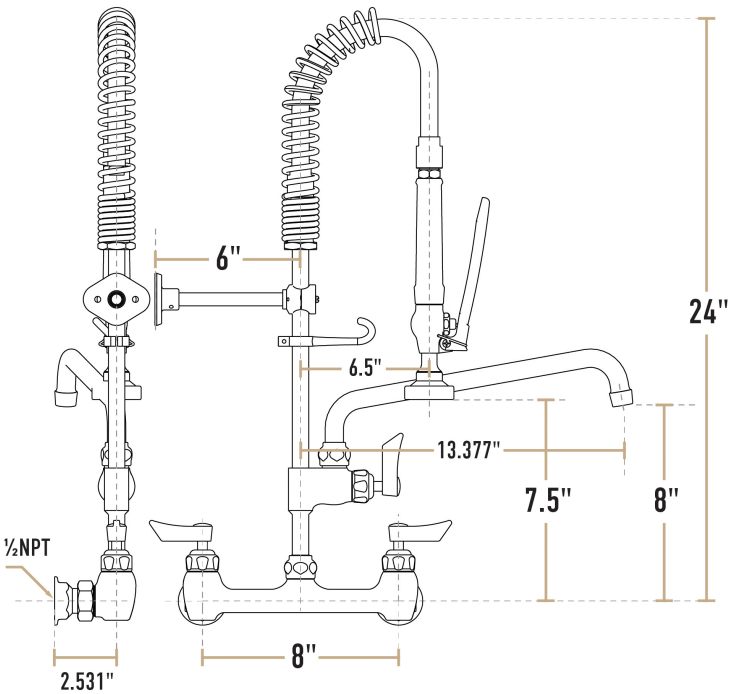

© 2026 Waterloo

Notes & Details

This Waterloo low-profile wall-mounted pre-rinse faucet is perfect for rinsing excess food and sauces off of your dishes prior to running them through your commercial dish machine, and its reduced height makes it a great fit for commercial kitchens where space is at a premium. A quality pre-rinse unit is vital to any dish room, removing the heaviest soil deposits so that dishes come out clean and ready to use. Waterloo products provide the industry-leading quality you expect. With heavy-duty chrome-plated brass faucet bodies, ceramic cartridges engineered for durability, and certifications from a wide range of national and local regulatory agencies, you can install Waterloo products with confidence.

A 23" long flexible hose gives you plenty of reach to deliver water where you need it, letting you handle glassware and dinnerware, or bulky items like pots and pans. The spring has a compressed bottom to provide greater durability and help it retain its shape. The spray valve delivers a flow rate of 1.15 GPM, giving you the power needed to blast away food debris while being easy on your water bill. The heavy-duty valve body is designed with a comfort-grip handle and uses metal components for maximum durability and leak protection.

This pre-rinse unit also comes with a 12" add-on faucet with a 1.8 GPM flow rate, for times when you need a normal faucet instead of a spray valve. It is perfect for filling up sink compartments to complete your warewashing tasks. It's also great for mixing up cleaning solutions in sanitation pails.

These faucets use quarter-turn ceramic cartridges, which provide a much lower fail rate than the compression cartridges widely used in the industry. In this design, 2 ceramic discs fit together to create a watertight seal when closed, removing the need for a rubber seat washer, which is one of the most frequently replaced parts on a faucet. This is a wall-mounted faucet, and it comes with 8" adjustable centers that line up with your sink or mounting surface centers to make installation easy. Required installation kits are sold separately. A set of 1/2" NPT inlets make it easy to connect it to your facility's water lines. Great for height-restricted installations, this low-profile pre-rinse unit comes with a 10" riser and a 6" wall bracket to help secure the unit to the wall for added stability.

⚠ **WARNING:** This product can expose you to chemicals including Lead, which are known to the State of California to cause cancer and birth defects or other reproductive harm. For more information, go to www.p65warnings.ca.gov.

© 2026 Waterloo