WATERLOO

Waterloo Single Hole Deck-Mount Faucet and 6" Gooseneck Spout and Supply Hoses and Lever Handles

#750CFD16G

Item #: 750CFD16G Qty: _____

Project: _____

Approval: _____ Date: _____

Features

- 6" long gooseneck spout with 1.2 GPM aerator
- Deck-mounted single base and 1/2" NPS inlets on 20" flexible water hoses
- Temperature rating of 40-180 degrees Fahrenheit
- Heavy-duty chrome-plated brass construction
- Leak-resistant quarter-turn ceramic cartridge with check valve

Certifications

CSA, US and Canada

Certified by NSF

1/2" Water Connection

Technical Data

Spout Length	6 Inches
Faucet Height	12 Inches
Cartridge Type	Ceramic
Faucet Centers	Single
Features	NSF Certified
Finish	Chrome
Flow Rate	1.2 GPM
Handle Type	Lever
Included	Flex Inlets
Material	Brass

© 2026 Waterloo

Technical Data	
Mounting Style	Deck Mounted
Mounting Type	Adjustable
Rough In	Single
Spout Clearance	8 5/16 Inches
Spout Connection Size	1"-20 UNEF
Spout Type	Gooseneck
Sprayer	Without Sprayer
Temperature Rating	40 - 180 Degrees F
Thread Type	NPS
Type	Faucets
Water Inlet Size	1/2 Inches

Plan View

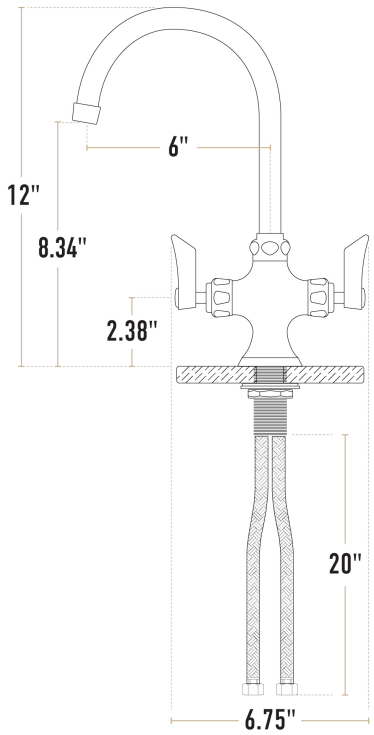

Notes & Details

This Waterloo deck-mounted faucet is the perfect solution when you need a dependable water fixture in your facility! Waterloo faucets provide the industry-leading quality you expect. With heavy-duty chrome-plated brass faucet bodies, ceramic cartridges engineered for durability, and certifications from a wide range of national and local regulatory agencies, you can install this model with confidence.

This faucet features a 6" long swivel gooseneck spout that provides a sleek look with plenty of clearance, while a 1.2 GPM aerator provides a consistent flow rate and minimal splashing. It boasts a single base, while the deck-mounted design is easy to install with a pair of 1/2" NPS inlets on 20" flexible water hoses.

This faucet uses quarter-turn ceramic cartridges, which provide a much lower fail rate than the compression cartridges widely used in the industry. In this design, 2 ceramic discs fit together to create a watertight seal when closed. This removes the need for a rubber seat washer, which is one of the most frequently replaced parts on a faucet. The sturdy lever handle design makes it easy to turn the water flow off and on.

© 2026 Waterloo

⚠ **WARNING:** This product can expose you to chemicals including Lead, which are known to the State of California to cause cancer and birth defects or other reproductive harm. For more information, go to www.p65warnings.ca.gov.

© 2026 Waterloo