BOBRICK

Technical Data

UTILITY SHELF WITH MOP/BROOM HOLDERS AND RAG HOOKS

B-239

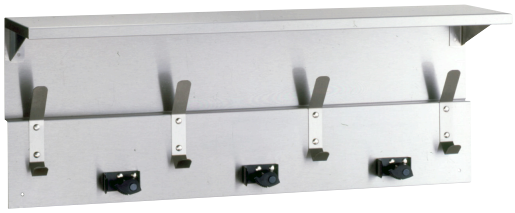

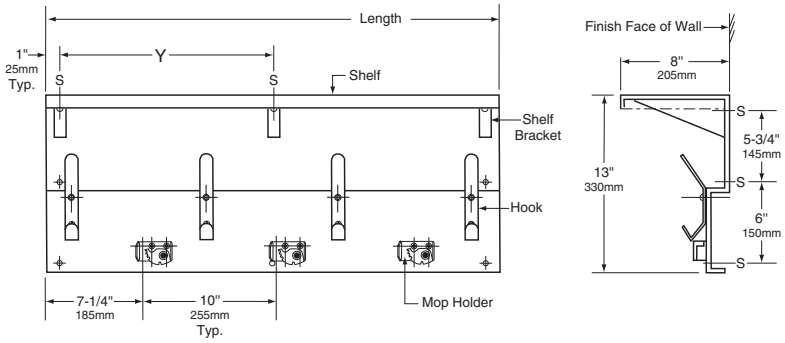

STANDARD STOCK SIZES

Model No.	Length	Dim. Y	Shelf Brackets	No. of Hooks	No. of Mtg. Holes	No. of Mop Holders
B-239 x 34	34" (865mm)	NA	2	4	6	3

MATERIALS:

Mounting Base and Shelf — 18-8, type-304, 18-gauge (1.2mm) stainless steel with satin finish. All-welded construction. Shelf is 8" (205mm) deep with 3/4" (19mm) return edge on all three sides. Front edge is hemmed for safety.

Shelf Support Brackets — 18-8, type-304, 16-gauge (1.6mm) stainless steel with satin finish. Welded to mounting base and shelf.

Mop/Broom Holders — Spring-loaded rubber cams with anti-slip coating. Plated steel retainers.

Hooks — 18-8, type-304, 12-gauge (2.8mm) stainless steel with satin finish. Each hook attached to mounting strip with two rivets.

OPERATION:

Utility shelf with holders is designed to keep mops and brooms away from wall. Spring-loaded rubber cam holders accommodate handles from 7/8" to 1-1/4" (22 to 30mm) diameter. Utility shelf above handle area provides clear access to stored materials.

INSTALLATION:

Secure unit to wall with Phillips-head screws, furnished by manufacturer, at points indicated by an *S*. For plaster or dry wall construction, provide concealed backing to comply with local building codes, then secure unit with screws furnished. For other wall surfaces, provide fiber plugs or expansion shields for use with screws furnished, or provide 1/8" (3mm) toggle bolts or expansion bolts.

SPECIFICATION:

Utility shelf with mop/broom holders and rag hooks shall be type-304 stainless steel with all-welded construction; exposed surfaces shall have satin finish. Shelf shall be 18 gauge (1.2mm), 8" (205mm) deep with 3/4" (19mm) return edges, and shall have front edge hemmed for safety.

Utility Shelf With Mop/Broom Holders And Rag Hooks shall be Model 239 x 34 of Bobrick Washroom Equipment, Inc., Clifton Park, New York; Jackson, Tennessee; Los Angeles, California; Bobrick Washroom Equipment Company, Scarborough, Ontario; Bobrick Washroom Equipment Pty. Ltd., Australia; and Bobrick Washroom Equipment Limited, United Kingdom.

The illustrations and descriptions herein are applicable to production as of the date of this Technical Data Sheet.
The manufacturer reserves the right to, and does from time to time, make changes and improvements in designs and dimensions.

Revised 11/09 Printed in U.S.A.
© 2009 by Bobrick Washroom Equipment, Inc.