centerline by Traulsen

Project _____

AIA # _____ SIS # _____

Item # _____ Quantity _____ C.S.I. Section 114000

Compact Undercounter Freezer

CLUC-48F

Compact Undercounter Freezer
Self-Contained Solid Doors

STANDARD PRODUCT FEATURES

- Self-Contained Rear-Mounted Refrigeration System Using R-290 Refrigerant
- High Quality Stainless Steel Construction
- Anodized Aluminum Interior
- Stay Open Door Feature at 105°
- LED Display Control for Accuracy and Easy Monitoring
- Capillary Tube Metering Device
- Maintains Cabinet Temperature of -3°F to 3°F
- Two (2) Adjustable, Heavy Duty Epoxy Coated Shelves Per Section
- Field Reversible Door(s)
- Set of Four (4) 4" H Casters, Front Two w/ Locks, Pre-installed on Device
- Gasket-Protecting Retainer
- High-Density, Non-CFC Foamed In Place Polyurethane Insulation
- Easy to Grip Door Handles

Intertek Intertek

Models listed to the applicable UL, CSA and NSF standards by an approved NRTL. Consult the factory or unit data plate for additional information.

ACCESSORIES & OPTIONS (Available at Extra Cost)

+ Additional Epoxy Coated Shelves on Pilasters
+ Set of Four (4) 6" High Legs
+ Set of Four (4) 6" High Casters
+ Set of Four (4) 2-3/4" High Casters

AVAILABLE CONFIGURATIONS

MODELS	HINGING
CLUC-48F-SD-LR	Solid Doors, Left/Right
CLUC-48F-SD-RR	Solid Doors, Right/Right
CLUC-48F-SD-LL	Solid Doors, Left/Left

ENERGY STAR® Listed Commercial Freezer
For full listing visit energystar.gov

Model	Doors	Shelves	Dimensions L x D x H (in.)	Voltage	Amps	NEMA	Cu. Ft.
CLUC-48F-SD	2	4	48.25 x 31.5 x 30*	115/60/1	6.6	5 - 15P	13.28

*Note: 30 in. height without casters

Approved by _____ Date _____ Approved by _____ Date _____

CLUC-48F
Compact Undercounter Freezer

MODEL - CLUC-48F-SD

Solid Door Models

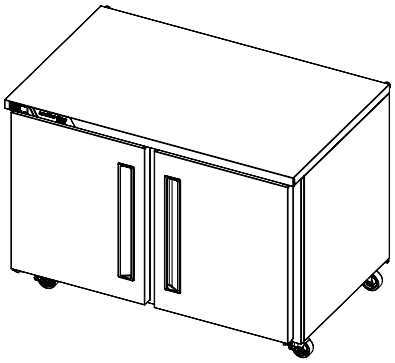

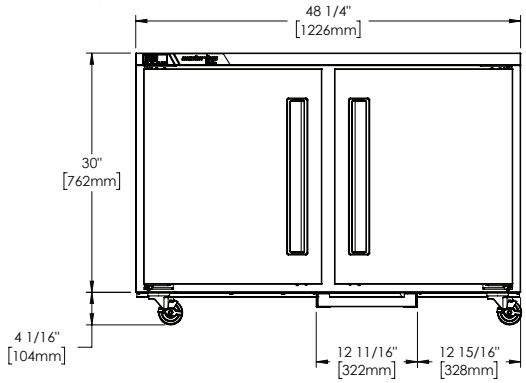

ELEVATION

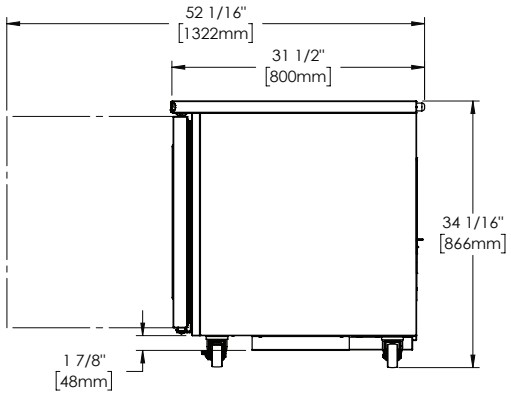

SIDE VIEW

SPECIFICATIONS

CONSTRUCTION, HARDWARE, INSULATION

Cabinet exterior front, sides, and door(s)are constructed of stainless steel. Cabinet interior is constructed of anodized aluminum. A set of four (4) 4" high casters are included. Doors are equipped with a gasket protecting retainer. Both the cabinet and door(s) are insulated with an average of 2-3/8" thick high density, non-CFC, foamed in place polyurethane insulation.

REFRIGERATION SYSTEM

A rear mounted, self-contained, balanced refrigeration system using environmentally friendly, low GWP R-290 refrigerant is provided. It features an easy to clean rear facing condenser, capillary tube metering device, and air-cooled hermetic compressor. A 9' cord and plug is provided. Standard operating temperature is -3°F to 3°F.
Energy efficient refrigeration system maintains safe product temperatures. Condenser is located in the back of the unit for easy maintenance and zero clearance.

CONTROLLER

The easy to use electronic digital control is supplied standard. It includes a 3-Digit LED display, and a Fahrenheit or Celsius temperature scale display capability.

INTERIOR

Standard interior arrangements include two (2) epoxy coated wire shelves per section, mounted on pilasters. Recommended load limit per shelf should not exceed 150 lbs.

WARRANTY

Both a 6 Year Parts & Labor Warranty and additional 1 Year on Compressor Parts Warranty are supplied standard.

MODELS	CLUC-48F-SD
ELECTRICAL DATA	
Voltage	115/60/1
Full Load Amperes	6.6
REFRIGERATION DATA	
Refrigerant	R-290
Refrigerant Charge oz.	2.9 (82.2 g)
BTU/HR | H.P.[1]	1750 | 1/2
SHIPPING DATA	
Depth Crated in.	35 (88.9 cm)
Height Crated in.	37 (94 cm)
Length Crated in.	53 (134.6 cm)
Volume Crated cu. ft.	39.7 (1125 l)
Net Weight lbs.	279 (126.6 kg)
Gross Weight lbs.	310 (140.6 kg)

NOTES:
1. BTU/HR based on a 90°F ambient and -20°F evaporator

Equipped with one NEMA 5-15P Plug

As continued product improvement is a policy of Traulsen, specifications are subject to change without notice.

CAD and/or Revit Files Available