C SERIES

2-SECTION COMPACT SOLID DOOR FORCED-AIR MEGA TOP PREP TABLE

Project Name:	Location:		AIA #:
Item #:	Qty:	Model #:	SIS #:

C SERIES - STAINLESS STEEL EXTERIOR & INTERIOR

48” WIDE MODELS

CLPT-4818-SD-LR Hinged Left/Right
CLPT-4818-SD-LL Hinged Left/Left
CLPT-4818-SD-RR Hinged Right/Right

SPECIFICATIONS

DIMENSIONAL DATA	
1/6 Pans (top)	18
Length in.	48-9/16 (123.3 cm)
Depth in.	35-3/4 (90.8 cm)
Overall Height in.[2]	44 (111.8 cm)
ELECTRICAL DATA	
Horsepower[1]	1/5
Amps	2.6
Voltage	115/60/1
NEMA	5-15P
REFRIGERATION DATA	
Refrigerant	R-290
Charge Amount oz.	3.0 (85 g)
BTU	1800

When ordering please specify:
Voltage, Hinging, and Options

NEMA 5-15P

1. Based on 90°F ambient & 20°F evaporator.
2. Overall height includes 4” (10.2 cm) for casters.

PLAN VIEW

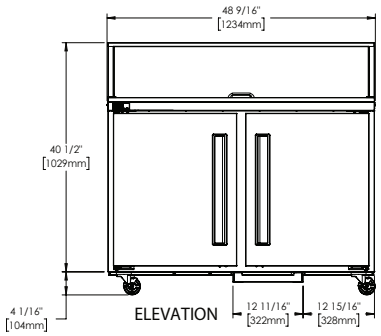

ELEVATION

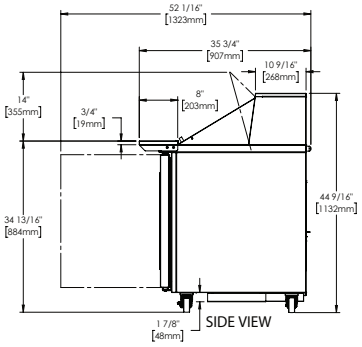

SIDE VIEW

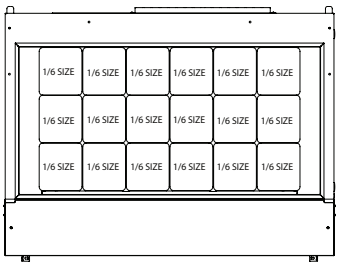

PAN LAYOUT

Models listed to applicable UL, CSA, and NSF standards by an approved NRTL. Consult the factory or unit data plate for additional information.

Specifications subject to change without notice. Chart dimensions are rounded up to the nearest 1/16” (centimeters rounded up to the nearest tenth).

2026 © Traulsen • 4401 Blue Mound Road | Fort Worth, TX 76106 • 1 (800) 825-8220 • www.traulsen.com

C SERIES

2-SECTION COMPACT SOLID DOOR FORCED-AIR MEGA TOP PREP TABLE

Project Name:	Location:		AIA #:
Item #:	Qty:	Model #:	SIS #:

REFRIGERATION SYSTEM

• Self-contained, side-mounted system uses environmentally friendly, minimal GWP R-290 refrigerant

• Tested to NSF7 standards

• Front-breathing system allows zero-clearance installation

• High performance, balanced system operates at 32-41°F (0-5°C) to maintain consistent, food-safe temperatures

• Chambered, forced-air rail operation

• LED display for microprocessor control is water-resistant

• Capillary tube metering device

CABINET CONSTRUCTION

• Stainless steel exterior and interior

• Insulated hood

• Exterior top, back, and bottom is constructed of heavy gauge galvanized steel

• Cabinet is insulated with an average of 2-3/8" (6.03 cm) thick high density, non-CFC foamed-in-place polyurethane

• Full access to pan rail for easy cleaning

• (18) 4" deep 1/6 size polycarcbonate pans; rail accommodates up to 6" deep pans

• 8" (20.3 cm) deep, full-length, removable NSF-approved white polyethylene cutting board supplied standard

• A set of (4) 4" (10.2 cm) high casters; (2) with brakes, (2) without brakes; factory-installed

• 9' cord & plug provided

DOORS

• Foamed-in-place, recessed handles

• Doors are self-closing with a stay-open feature

• Magnetic, snap-in door gaskets

• Gasket-protecting retainer

• Field-reversible

INTERIORS

• (2) adjustable, epoxy coated wire shelves per section supported on pilasters; load should not exceed 150 pounds (68.03 kg)

FIELD-INSTALLED OPTIONS

• Additional expoxy coated shelves on pilasters

• Single overshelf, 48"W x 18"H x 16"D (CLUCACC-48OSHELF)

• Set of (4) 6" (15.2 cm) legs

• Set of (4) 6" (15.2 cm) casters

• Set of (4) 2-3/4" (7 cm) casters

WARRANTY

Both a six-year parts and labor warranty, and an additional one-year compressor parts warranty (for a total of seven years) are provided standard

CAD and/or Revit Files Available

https://traulsen.kclcad.com

Approved by:	**Approved by:**	**Date:**

2026 © Traulsen • 4401 Blue Mound Road | Fort Worth, TX 76106 • 1 (800) 825-8220 • www.traulsen.com