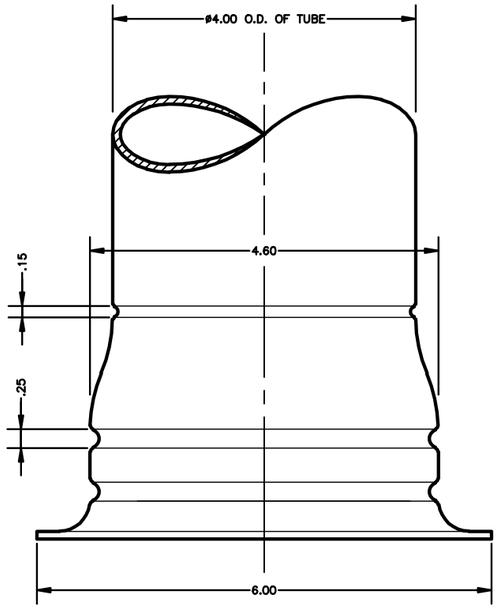

BOTTOM DETAIL

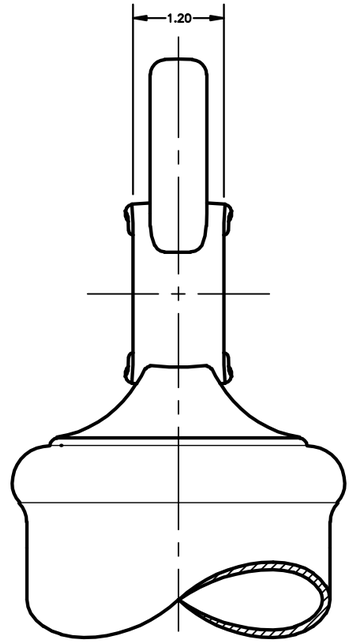

SIDE VIEW
TOP DETAIL

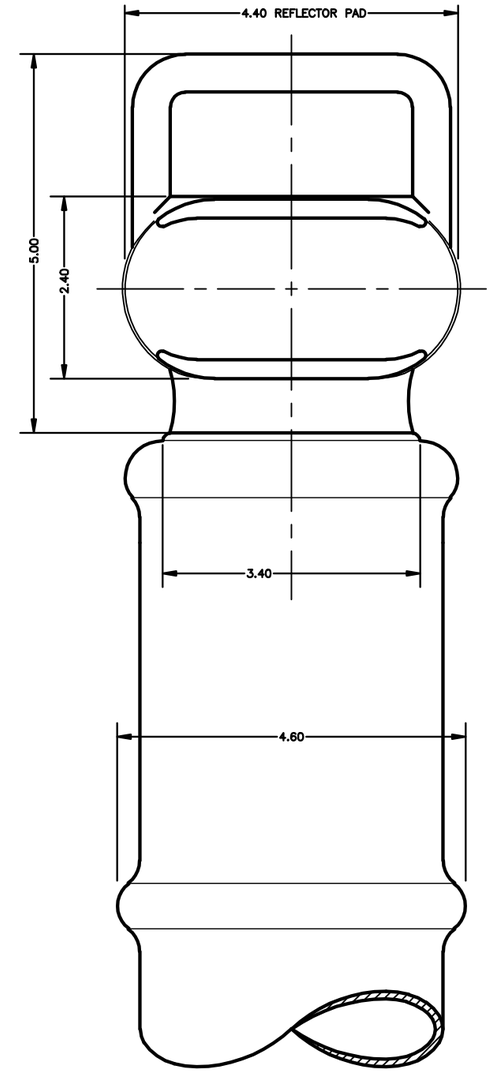

FRONT VIEW
TOP DETAIL

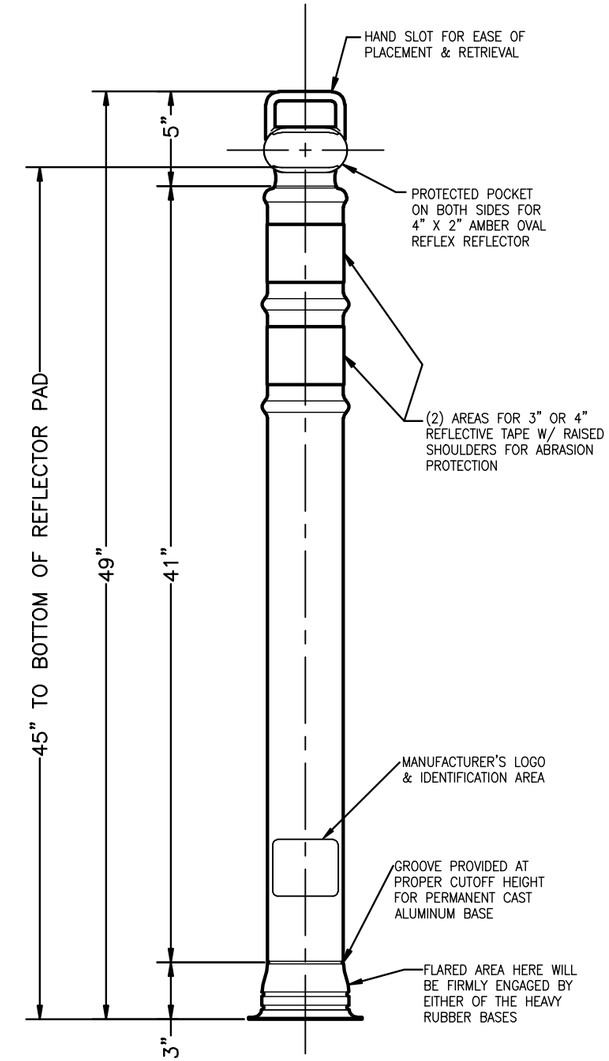

FULL TUBE
SCALE 1 = 8

PART NUMBER	DESCRIPTION
03–730	DELINEATOR BASE, RUBBER,10 LB, NOT ILLUSTRATED HERE
03–731	DELINEATOR BASE, RUBBER, 15 LB, NOT ILLUSTRATED HERE
03–733	DELINEATOR BASE, CAST ALUMINUM, FOR PERMANENT MOUNT, NOT ILLUSTRATED HERE
03–734	EASY GRAB DELINEATOR POST, FLARED, 45" W/ (2) 3" H.I. COLLARS
03–734RB	EASY GRAB DELINEATOR POST, FLARED, 45" W/ (2) 3" H.I. COLLARS, W/ 10 LB BASE
03–735	DELINEATOR POST, STRAIGHT, W/ (2) 3" REFLECTIVE BANDS, USED W/ PERMANENT BASE
03–737	EASY GRAB DELINEATOR POST, FLARED, 45" W/ (2) 3" H.I. COLLARS & (2) OVAL REFLECTORS
03–738	EASY GRAB DELINEATOR POST, FLARED, 45" W/ (2) STROBES
03–739	EASY GRAB DELINEATOR POST, FLARED, 45" W/ (2) 3" H.I. COLLARS & (2) STROBES
03–740	EASY GRAB DELINEATOR POST, FLARED, 45", PLAIN, ORANGE (AS SHOWN ON THIS DRAWING)
03–744	EASY GRAB DELINEATOR POST, FLARED, 45" W/ (2) 3" H.I. COLLARS & (1) STROBE
03–745AB	DELINEATOR POST, STRAIGHT, W/ (2) 3" REFLECTIVE BANDS, INCLUDES PERMANENT ALUMINUM BASE
03–745ABC	DELINEATOR POST, STRAIGHT, W/ (2) 4" REFLECTIVE BANDS, INCLUDES PERMANENT ALUMINUM BASE
03–747B	EASY GRAB DELINEATOR POST, FLARED, 45" W/ (2) 3" H.I. COLLARS, BLUE
03–747FG	EASY GRAB DELINEATOR POST, FLARED, 45" W/ (2) 3" H.I. COLLARS, FOREST GREEN
03–747W	EASY GRAB DELINEATOR POST, FLARED, 45" W/ (2) 3" H.I. COLLARS, WHITE
03–747Y	EASY GRAB DELINEATOR POST, FLARED, 45" W/ (2) 3" H.I. COLLARS, YELLOW
03–747	EASY GRAB DELINEATOR POST, FLARED, 45" W/ (2) 4" H.I. COLLARS, YELLOW
03–747LD	EASY GRAB DELINEATOR POST FLARED, 45" W/ (2) 4" H.I. COLLARS, YELLOW

REV	REF	REVISION DESCRIPTION	BY	DATE
B	----	ADDED P/N'S FOR MORE COMBO'S OF REFLECTORS, COLLARS, STROBES, BASES & COLORS	JIL	6–11–2007
A	----	ORIGINAL RELEASE, CATEGORY I DEVICES TO BE SELF–CERTIFIED FOR NHS USAGE	JIL	3–20–2003

MATERIAL
TUBE – POLYETHYLENE
REFLECTOR – ACRYLIC
REMAINDER – PROPRIETARY

COLOR AND FINISH
TUBE – ORANGE
REFLECTOR – SAE AMBER
BANDS – WHITE HI INTENSITY

THIRD ANGLE PROJECTION

TOLERANCES UNLESS OTHERWISE SPECIFIED
2 PLACE DECIMALS ± N/A
3 PLACE DECIMALS ± N/A
ANGULAR DIMENSIONS ± N/A

THIS DRAWING IN DESIGN AND DETAIL IS THE PROPERTY OF CORTINA TOOL & MOLDING COMPANY
MATERIAL DESCRIBED AND INFORMATION CONVEYED MAY NOT BE COPIED, DIVULGED TO OTHERS OR USED FOR MANUFACTURING OR ANY OTHER PURPOSE WITHOUT CONSENT ALL DESIGN AND INVENTION RIGHTS RESERVED

Cortina Safety Products Group
A Cortina Company
REGISTERED ISO 9002
www.cortinaco.com
10706 WEST GRAND AVENUE, FRANKLIN PARK, IL 60131

EZ GRAB HIGHWAY DELINEATOR POST
W/ OPTIONAL OVAL REFLECTORS OR STROBE LIGHTS, H.I. COLLARS, REFLEX BANDS AND CHOICE OF BASES

SCALE AT B SIZE 1 = 2		DRAWING NUMBER	REVISION
DRAFTER JIL	DATE 3–20–2003	03–737	B
CHECKER SPG	DATE 3–20–2003		