BOBRICK

Technical Data

TOWEL BAR

B-545
B-5456

Specify Model Required:

- ☐ B-545 Satin-finish stainless steel
- ☐ B-5456 Bright Polished stainless steel

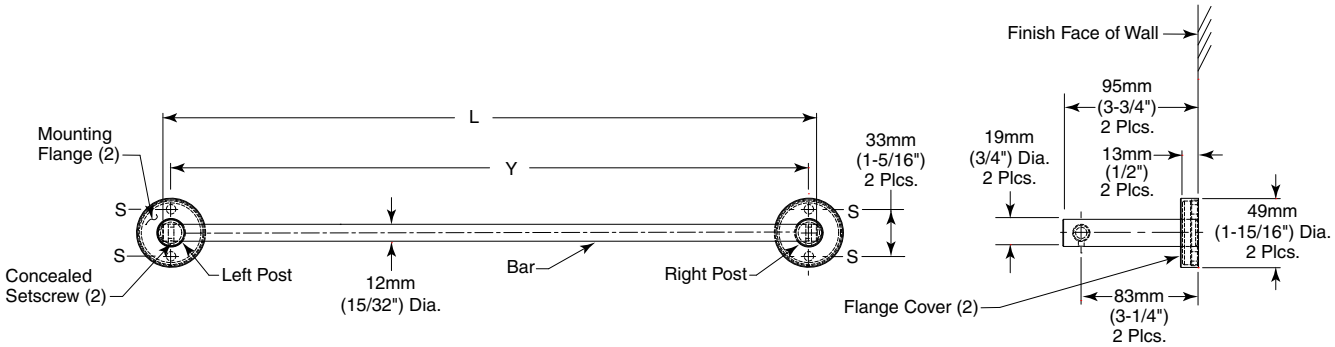

STANDARD STOCK SIZES

Model No.	Bar Length L	Centerline-to-Centerline Y
B-545 x 18	460mm (18")	450mm (17-5/8")
B-545 x 24	610mm (24")	600mm (23-5/8")
B-5456 x 18	460mm (18")	450mm (17-5/8")
B-5456 x 24	610mm (24")	600mm (23-5/8")

MATERIALS:

Post — 18-8, type-304, 19mm (3/4") diameter, solid stainless steel rod. Post and Concealed Mounting Threaded Flange are machined as one piece.

Bar — 18-8, type-304, 12mm (15/32") diameter, solid stainless steel rod. Secured to Posts with two(2) concealed set screws.

Concealed Mounting Threaded Flange — 18-8, type-304, 6mm (7/32") thick, stainless steel plate with thread on outside edge for fastening cover. 46mm (1-13/16") outside diameter with two holes for attachment to wall.

Threaded Flange Cover — 18-8, type-304, 1mm (17-gauge), machined stainless steel. 49mm (1-15/16") diameter 13mm (1/2") deep. Cover fastens over mounting flange to conceal mounting screws.

INSTALLATION:

For plaster or dry wall construction, provide concealed backing to comply with local building codes, then secure unit with sheet-metal screws (not furnished). For other wall surfaces, provide fiber plugs or expansion shields for use with sheet-metal screws (not furnished), or provide 3mm (1/8") toggle bolts or expansion bolts. For partitions with particle-board or other solid core, secure with sheet-metal screws (not furnished), or provide through-bolts, nuts, and washers. For hollow-core metal partitions, provides a solid backing into which the sheet-metal screws (not furnaished) can be secured. NOTE: centerline-to-centerline of mounting flanges must be within 2mm (1/16") of the Y dimension given.

SPECIFICATION:

Towel bar shall be type-304 stainless steel with _____ (insert one satin finish or bright polished) finish. Towel bar shall have two (2) 19mm (3/4") diameter posts. Bar shall be 12mm (15/32") diameter secured to post with two (2) concealed set screws. Concealed mounting flange shall be 6mm (7/32") thick stainless steel plate, 46mm (1-13/16") outside diameter and equipped with two screw holes for attachment and thread on outside edge to fasten cover. Threaded flange cover shall be 1mm (17-gauge) stainless steel, 49mm (1-15/16") diameter and shall fasten over mounting flange to conceal mounting screws. Post and mounting flange are to be machined as one piece.

Towel Bar shall be Model _____ (insert model number) of Bobrick Washroom Equipment, Inc., Clifton Park, New York; Jackson, Tennessee; Los Angeles, California; Bobrick Washroom Equipment Company, Scarborough, Ontario; Bobrick Washroom Equipment Pty. Ltd., Australia; and Bobrick Washroom Equipment Limited, United Kingdom.

The illustrations and descriptions herein are applicable to production as of the date of this Technical Data Sheet.
The manufacturer reserves the right to, and does from time to time, make changes and improvements in designs and dimensions.

Form No. B-545-200
© 2015 by Bobrick Washroom Equipment, Inc.