ECONOMY SPREADER BEAM W/ MAGNETIC LIFTERS - SBM-20-10-ML

APPROX WEIGHT: 287.81 lbs.
DOES NOT INCLUDE WEIGHT OF POWER OR PACKAGING!!!

*** ANY ADDITIONS, DELETIONS, OR OMISSIONS MUST BE CORRECTED ON THIS DRAWING AS THIS DRAWING WILL BE CONSIDERED ALL INCLUSIVE ***
ALL GRAPHICS PROVIDED ARE FOR REFERENCE ONLY. IF CERTAIN DIMENSIONS ARE CRITICAL PLEASE VERIFY THOSE DIMENSIONS WITH YOUR SALESPERSON

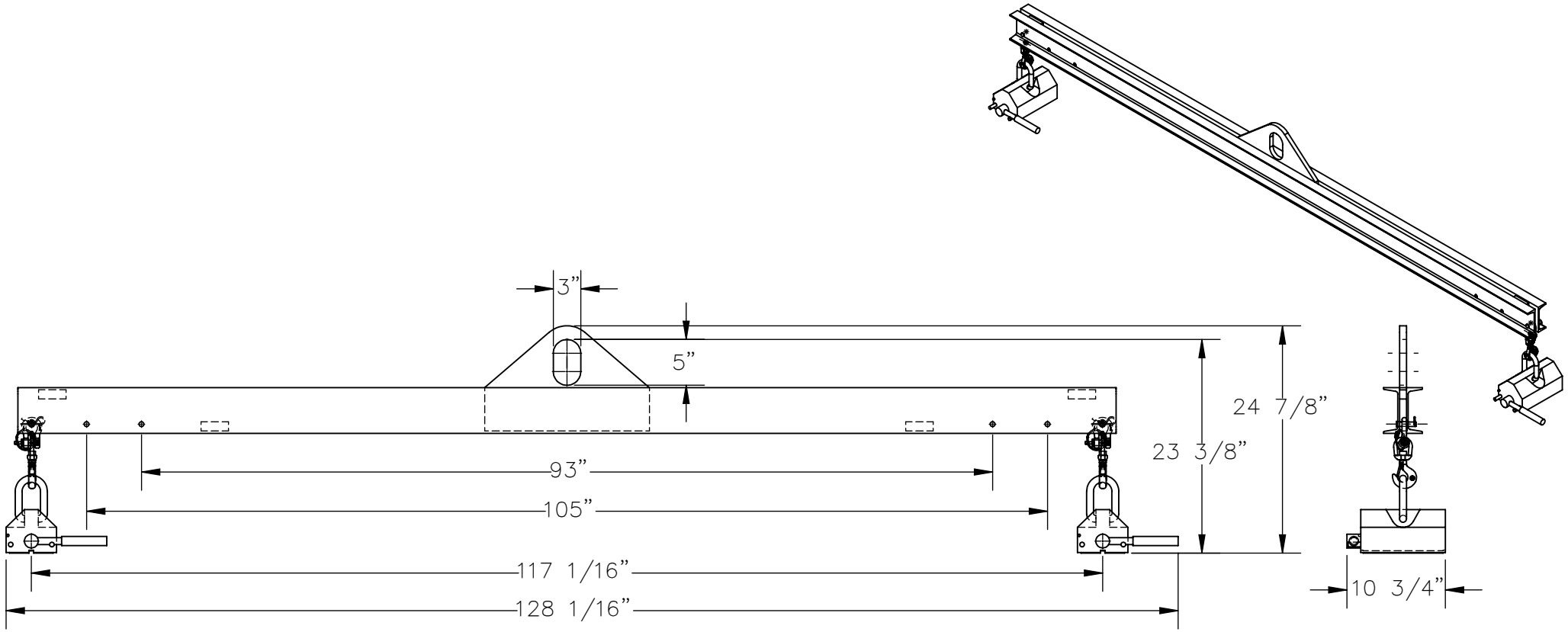

DIMENSION TOLERANCE ± 1/4"

STANDARD FEATURES

MODEL NUMBER IS SBM-20-10-ML
OVERALL WIDTH IS 10 3/4”
OVERALL HEIGHT IS 24 7/8”
OVERALL LENGTH IS 128 1/16”
USABLE BAIL IS 3"x5"
MINIMUM SPREAD IS 93”
MAXIMUM SPREAD IS 117 1/16”
HEADROOM IS 23 3/8”
MAX UNIFORM FLAT CAPACITY IS 2000 LBS.
MAX UNIFORM ROUND CAPACITY IS 800 LBS.
SPREADER BEAM TOUGH BAKED IN POWDER COAT BLUE FINISH
MAGNET LIFTERS TOUGH BAKED IN POWDER COAT YELLOW FINISH

SPECIAL FEATURES

NONE

APPROVAL

I, THE UNDERSIGNED, AGREE THAT THE PRODUCT AS REPRESENTED SATISFIES DESIGN AND DIMENSION REQUIREMENTS. I ALSO ACKNOWLEDGE MY DUTY TO CONFIRM PRODUCT AND INSTALLATION COMPLIANCE WITH ALL APPLICABLE FEDERAL, STATE AND LOCAL REGULATIONS AND STANDARDS.

ANY MODIFIED UNITS ARE NON-RETURNABLE

[ ] As drawn [ ] As marked

Signed:_____ Date:_____

Printed Name:_____

LEAD TIME WILL START UPON RECEIPT OF SIGNED APPROVAL DRAWING

FOR INTERNAL USE ONLY PROJECT SIGN OFF	
SALES	
ENG.	
FAB.	
POWER	

DISTRIBUTOR'S NAME: VESTIL MANUFACTURING			P.O.# X
			W.O.# X
DRAWN BY: JGB	DATE: 03/30/2020		SALES: X
REFERENCE: X		SCALE: 1:16	FILE NAME: 08-007-455
QUOTED LEAD TIME: X	QUOTE # X		