CLPT/CLUC Overshelf Field Installation Instructions

Available For All Compact Units

1. UNPACK OVERSHELF

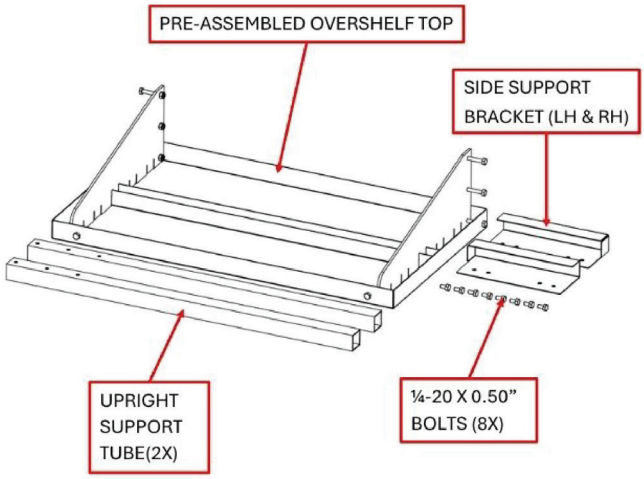

2. REMOVE 4 PLUGS ON SIDE OF UNIT(BOTH SIDES) AND BUMPERS IN BACK OF UNIT.

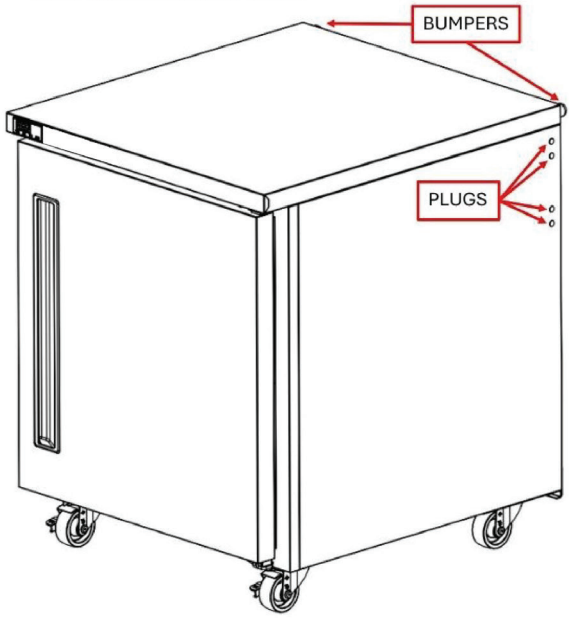

3. INSTALL SIDE SUPP BRACKET. DO NOT TIGHTEN. BOTH SIDES

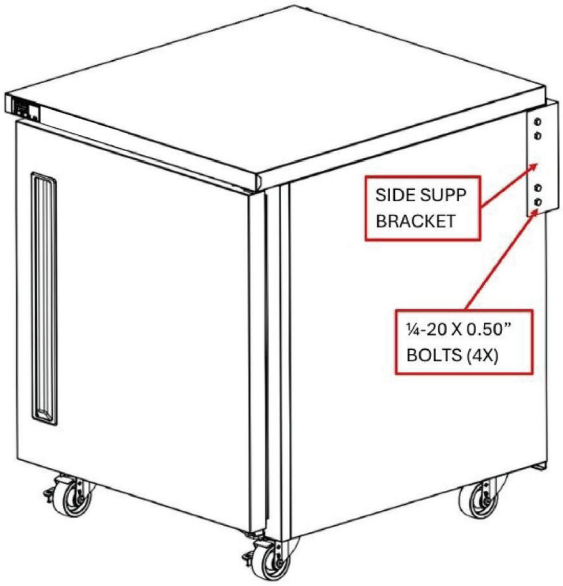

4. REMOVE 1.875" BOLTS AND LOCKNUTS.

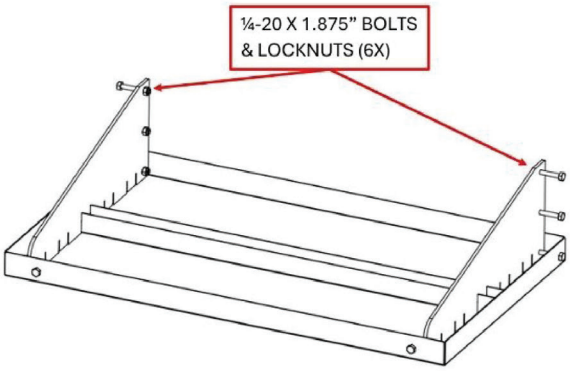

See Back For Additional Instructions

5. INSTALL UPRIGHT SUPP TUBE WITH 1.875” BOLTS. TIGHTEN BOLTS & LOCKNUTS.

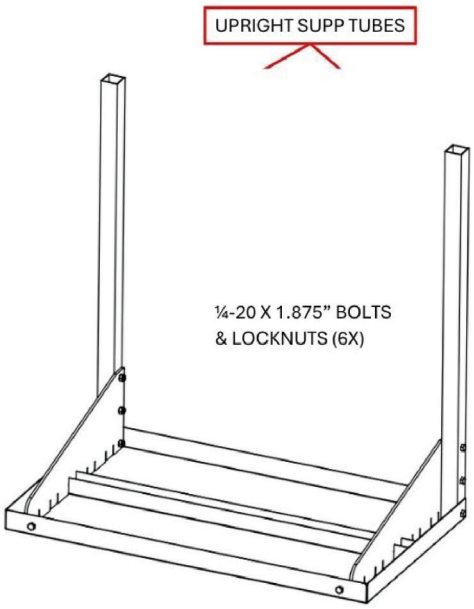

6. ROTATEOVERSHELFTOUPRIGHT POSITION AND ALIGN WITH SIDE SUPP BRACKETS.

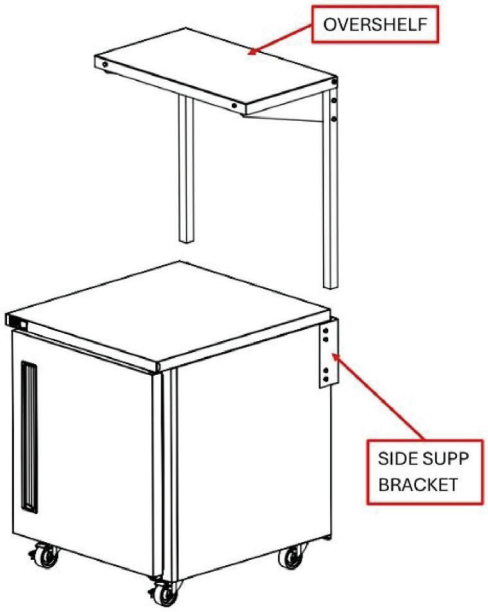

7. LOWER OVERSHELF INTO SIDE SUPP BRACKET OPENINGS.

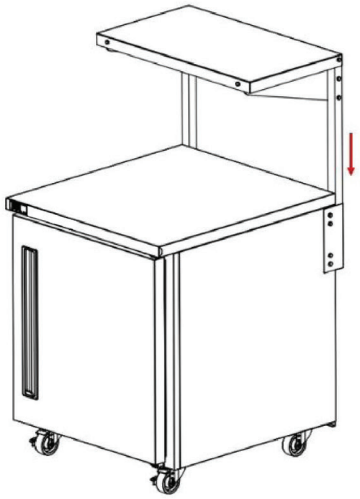

8. APPLY FORCE TO SUPP BRACKETS FORWARD TO ENSURE TUBEISFLUSHWITHCABINET. TIGHTENBOLTSWHILE APPLYING FORCE.(BOTH SIDES)

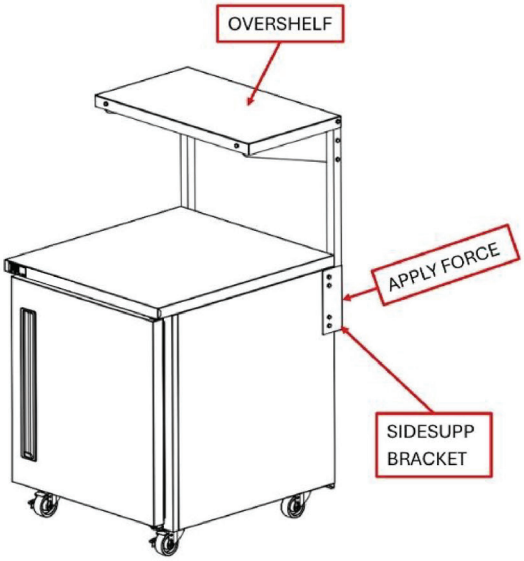

Need Service or Support?

If you require assistance, please contact Traulsen’s Service Department directly:

1-800-825-8220 | service@traulsen.com