**IMPORTANT NOTE:**
Locate the Specification Label on unit to determine exact Model Name and electrical specifications. This information is needed to identify the correct replacement parts. See exploded view illustration(s) for Specification Label location.

**⚠ CAUTION**

**Use of replacement parts other than those supplied by Hatco Corporation may result in damage to unit or injury to personnel and will void all warranties.**

# Glo-Ray®

## Merchandising Display Warmers

### *GRSDS Series*


| Model Name | Page | Model Name | Page | Model Name | Page |
|---|---|---|---|---|---|
| GRSDS-24 | 2 | GRSDS-24D | 4 | GRSDS-24T | 6 |
| GRSDS-30 | 2 | GRSDS-30D | 4 | GRSDS-36T | 6 |
| GRSDS-36 | 2 | GRSDS-36D | 4 | GRSDS-41T | 6 |
| GRSDS-41 | 2 | GRSDS-41D | 4 | GRSDS-52T | 6 |
| GRSDS-52 | 2 | GRSDS-52D | 4 | | |
| GRSDS-60 | 2 | GRSDS-60D | 4 | | |


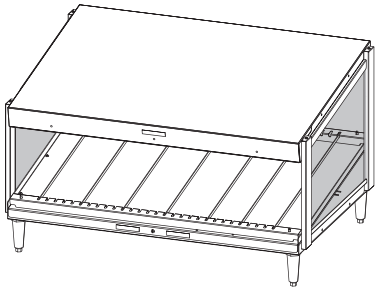

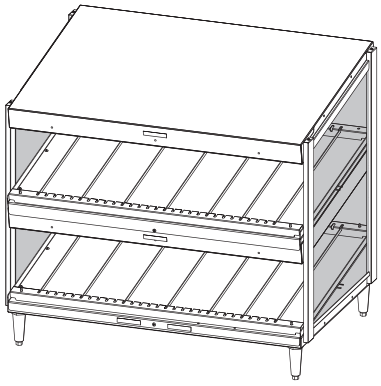

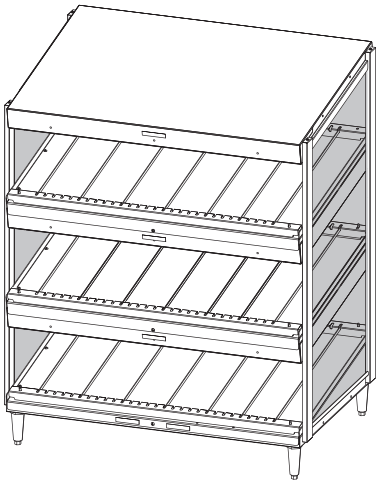

# Replacement Parts List

© 2025 Hatco Corporation

# Hatco® Glo-Ray® Merchandising Warmer

## GRSDS — Single Shelf Models

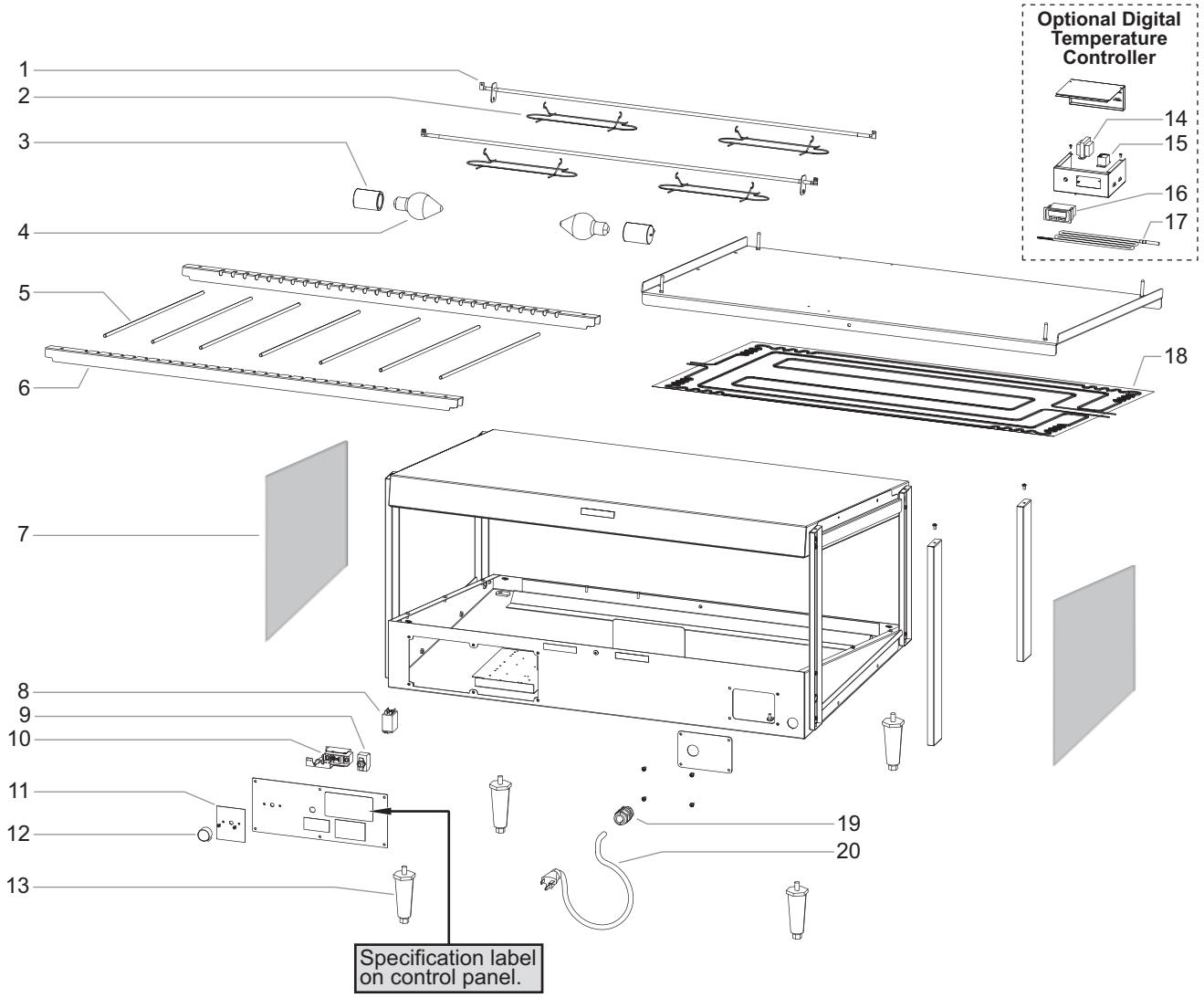


| Item | Description | Part No. | Qty. |
|---|---|---|---|
| 1 | Calrod Element | | |
| | 24″ Width, 120 V | R02.08.225D.00 | 2 |
| | 30″ Width, 120 V | R02.08.222D.00 | 2 |
| | 36″ Width, 120 V | R02.08.223D.00 | 2 |
| | 41″ Width, 120 V | R02.08.224D.00 | 2 |
| | 52″ Width, 120 V | R02.08.212D.00 | 2 |
| | 60″ Width, 120 V | R02.08.262D.00 | 2 |
| | 24″ Width, 220/230, 230/240 V | R02.08.225D.00 | 2 |
| | 30″ Width, 220, 240, 220/230, 230/240 V | R02.08.232E.00 | 2 |
| | 36″ Width, 220, 240, 220/230, 230/240 V | R02.08.228E.00 | 2 |
| | 41″ Width, 220, 240, 220/230, 230/240 V | R02.08.229E.00 | 2 |
| | 52″ Width, 220, 240, 220/230, 230/240 V | R02.08.230E.00 | 2 |
| | 60″ Width, 220, 240, 220/230, 230/240 V | R02.08.264E.00 | 2 |

| Item | Description | Part No. | Qty. |
|---|---|---|---|
| 2 | Wire Guard | 04.37.145.00 | 2–8 |
| 3 | Light Socket | | |
| | 24″ Widths | R02.30.045.00 | 1 |
| | 30″ through 60″ Widths | R02.30.044.00 | 2–5 |
| 4 | Light Bulb | | |
| | 120 V | 02.30.265.00 | 2–5 |
| | 240 V | 02.30.266.00 | 2–5 |
| 5 | Divider Rods | 04.15.112.00 | 5–12 |
| 6 | Channel Divider | | |
| | 24″ Width | 04.15.054.00 | 2 |
| | 30″ Width | 04.15.753.00 | 2 |
| | 36″ Width | 04.15.754.00 | 2 |
| | 41″ Width | 04.15.755.00 | 2 |
| | 52″ Width | 04.15.756.00 | 2 |
| | 60″ Width | 04.15.075.00 | 2 |
| 7 | Glass Side Panel | 04.40.041.00 | 2 |

## GRSDS — Single Shelf Models

| Item | Description | Part No. | Qty. |
|---|---|---|---|
| 8 | Relay | R02.01.088.00 | 1 |
| 9 | On/Off Switch | R02.19.008A.00 | 1 |
| 10 | Thermostat, Base | | |
| | Date Code 2404 and newer | 02.16.231.00 | 1 |
| | Date Code between 2048 and 2404 | R02.16.039.00 | 1 |
| | Date Code 2047 and older | 02.16.002.00 | 1 |
| 11 | Label, Thermostat | 07.01.531.00 | 1 |
| 12 | Knob, Thermostat | | |
| | Date Code 2048 and newer | 05.30.039.00 | 1 |
| | Date Code 2047 and older | 05.30.018.00 | 1 |
| 13 | Leg, 4″ | 05.30.007.00 | 4 |
| 14 | Transformer * | | |
| | 120 V | 02.17.022.00 | 1 |
| | 220, 240 V | 02.17.023.00 | 1 |
| | 220/230, 230/240 V | 02.17.035.00 | 1 |
| 15 | Relay * | R02.01.050.00 | 2 |
| 16 | Digital Temperature Control * | R02.01.259.00 | 1 |
| 17 | Probe, Digital Temperature Control * | 02.01.418.00 | 1 |
| 18 | Blanket Heating Element | | |
| | 24″ Width, 120 V | 02.05.319.00 | 1 |
| | 30″ Width, 120 V | 02.05.213.00 | 1 |
| | 36″ Width, 120 V | 02.05.211.00 | 1 |
| | 41″ Width, 120 V | 02.05.209.00 | 1 |
| | 52″ Width, 120 V | 02.05.205.00 | 1 |
| | 60″ Width, 120 V | 02.05.287.00 | 1 |
| | 24″ Width, 220/230, 230/240 V | 02.05.100.00<br>02.05.131.00 | 3<br>2 |
| | 30″ Width, 220, 240, 220/230, 230/240 V | 02.05.222.00 | 1 |
| | 36″ Width, 220, 240, 220/230, 230/240 V | 02.05.220.00 | 1 |
| | 41″ Width, 220, 240, 220/230, 230/240 V | 02.05.218.00 | 1 |
| | 52″ Width, 220, 240, 220/230, 230/240 V | 02.05.216.00 | 1 |
| | 60″ Width, 220, 220/230 V | 02.05.289.00 | 1 |
| | 60″ Width, 240, 230/240 V | 02.05.291.00 | 1 |
| 19 | Cord Grip | | |
| | 120 V, Right Angle | 02.20.330.00 | 1 |
| | 120 V, Straight | R02.20.259.00 | 1 |
| | 220, 240, 220/230, 230/240 V | R02.20.259.00 | 1 |
| 20 | Power Cord and Plug | | |
| | 120 V, 24″–52″ Width, NEMA 5-15P | R02.18.030.00 | 1 |
| | 120 V, 60″ Width, NEMA 5-15P | R02.18.154.00 | 1 |
| | 120 V, 60″ Width, NEMA 5-20P (Canada) | 02.18.089.00 | 1 |
| | 240, 220/230, 230/240 V, 6 A, BS-1363 | 02.18.066.00 | 1 |
| | 240, 220/230, 230/240 V, 13 A, BS-1363 | 02.18.068.00 | 1 |
| | 240 V, 10 A, AS 3112 | 02.18.207.00 | 1 |
| | 220, 220/230 V, CEE 7/7 Schuko | 02.18.077.00 | 1 |

| Item | Description | Part No. | Qty. |
|---|---|---|---|
| 21 | Flip-Up Doors (optional, not shown) | | |
| | 24″ Width | SDS24FLIP | 1 |
| | 30″ Width | SDS30FLIP | 1 |
| | 36″ Width | SDS36FLIP | 1 |
| | 41″ Width | SDS41FLIP | 1 |
| | 52″ Width | SDS52FLIP | 1 |
| | 60″ Width | SDS60FLIP | 1 |
| | Wiring Diagram | | |
| | Thermostat Control | | |
| | 120 V, 24″–60″ Width | 10-01-966 | |
| | 220, 240, 220/230, 230/240 V, 30″–60″ Width | 10-01-1299 | |
| | 220, 240 V, 24″ Width | HS1-3689 | |
| | 220/230, 230/240 V, 24″ Width | HS1-4139 | |
| | Digital Temperature Control | | |
| | 120 V, 24″–60″ Width | 10-01-964 | |
| | 220, 240, 220/230, 230/240 V, 30″–60″ Width | 10-01-1298 | |
| | 220, 240 V, 24″ Width | HS1-3687 | |
| | 220/230, 230/240 V, 24″ Width | HS1-4146 | |

* For units with optional Digital Temperature Controller only.

*NOTE: Quantities shown as a range (example = "2–4") are dependent upon the width of a unit.*

The shaded areas contain information for **International models only.**

*NOTE: The last four digits in a ten digit numerical serial number are the manufacturing date code:* 962506**2204**

Year 2022

Week Four

# Hatco® Glo-Ray® Merchandising Warmer

## GRSDS — Dual Shelf Models

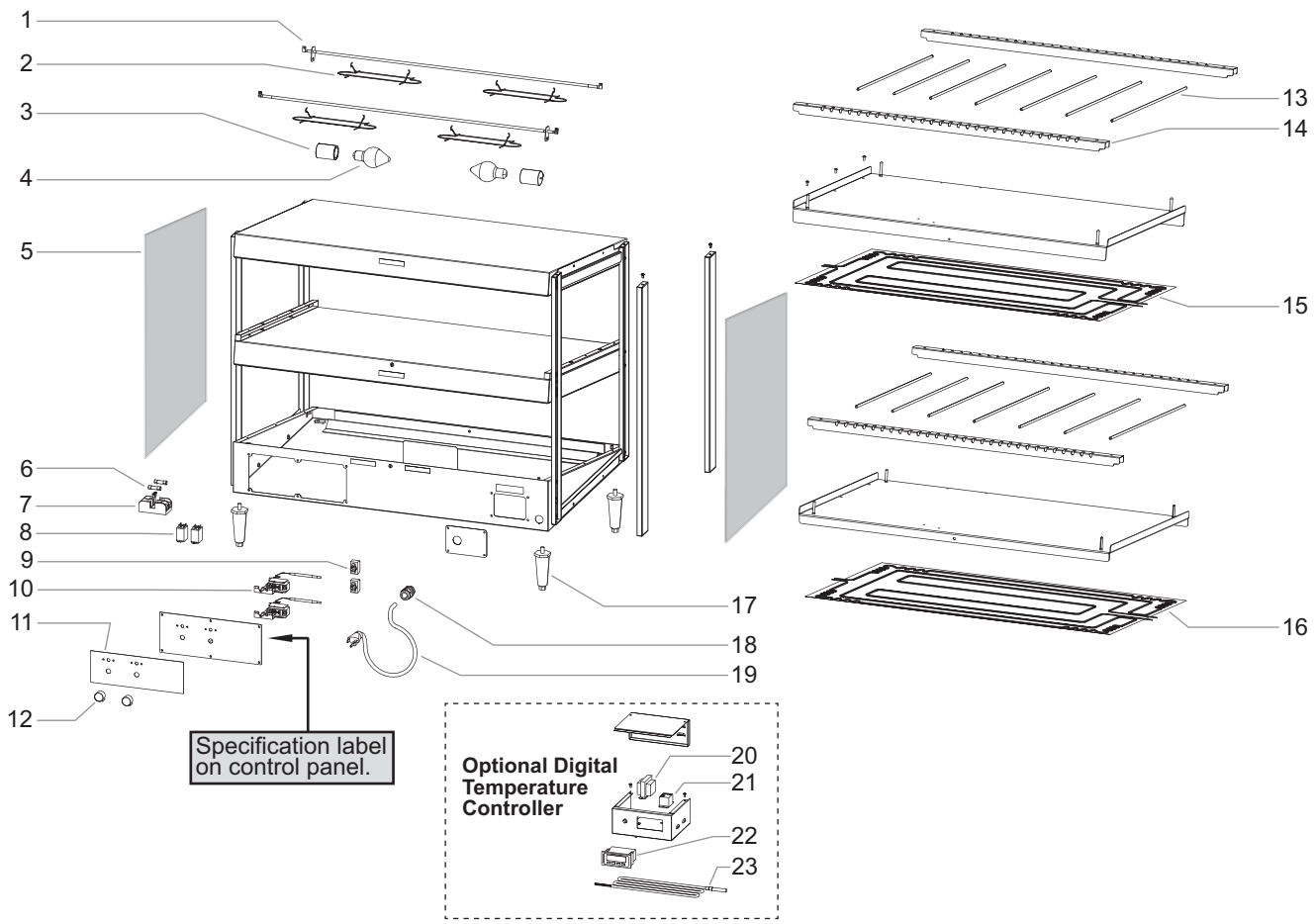


| Item | Description | Part No. | Qty. |
|---|---|---|---|
| 1 | Calrod Element | | |
| | 24″ Width, 120 V | R02.08.225D.00 | 4 |
| | 30″ Width, 120 V | R02.08.222D.00 | 4 |
| | 36″ Width, 120 V | R02.08.223D.00 | 4 |
| | 41″ Width, 120, 120/208–240 V | R02.08.224D.00 | 4 |
| | 52″ Width, 120, 120/208–240 V | R02.08.212D.00 | 4 |
| | 60″ Width, 120/208–240 V | R02.08.262D.00 | 4 |
| | 24″ Width, 220, 240, 220/230, 230/240 V | R02.08.225D.00 | 4 |
| | 30″ Width, 220, 240, 220/230, 230/240 V | R02.08.232E.00 | 4 |
| | 36″ Width, 220, 240, 220/230, 230/240 V | R02.08.228E.00 | 4 |
| | 41″ Width, 220, 240, 220/230, 230/240 V | R02.08.229E.00 | 4 |
| | 52″ Width, 220, 240, 220/230, 230/240 V | R02.08.230E.00 | 4 |
| | 60″ Width, 220, 240, 220/230, 230/240 V | R02.08.264E.00 | 4 |
| 2 | Wire Guard | 04.37.145.00 | 4–16 |
| 3 | Light Socket | | |
| | 24″ Widths | R02.30.045.00 | 2 |
| | 30″ through 60″ Widths | R02.30.044.00 | 4–10 |

| Item | Description | Part No. | Qty. |
|---|---|---|---|
| 4 | Light Bulb | | |
| | 120 V | 02.30.265.00 | 4–10 |
| | 240 V | 02.30.266.00 | 4–10 |
| 5 | Glass Side Panel | 04.40.038.00 | 2 |
| 6 | Fuse (2 pack) | R02.03.052.02 | 2 |
| 7 | Fuse Block | 02.03.022.00 | 1 |
| 8 | Relay | R02.01.088.00 | 2 |
| 9 | On/Off Switch | R02.19.008A.00 | 2 |
| 10 | Thermostat, Base | | |
| | Date Code 2418 and newer | 02.16.231.00 | 2 |
| | Date Code between 2048 and 2418 | R02.16.039.00 | 2 |
| | Date Code 2047 and older | 02.16.002.00 | 2 |
| 11 | Label, Thermostat | | |
| | Date Code 2418 and newer | 07.01.573.00 | 1 |
| | Date Code between 2048 and 2418 | 07.01.535.00 | 1 |
| | Date Code 2047 and older | 07.01.190.00 | 1 |
| 12 | Knob, Thermostat | | |
| | Date Code 2048 and newer | 05.30.039.00 | 2 |
| | Date Code 2047 and older | 05.30.018.00 | 2 |

## GRSDS — Dual Shelf Models

| Item | Description | Part No. | Qty. |
|---|---|---|---|
| 13 | Divider Rods | 04.15.112.00 | 10–24 |
| 14 | Channel Divider | | |
| | 24″ Width | 04.15.054.00 | 4 |
| | 30″ Width | 04.15.753.00 | 4 |
| | 36″ Width | 04.15.754.00 | 4 |
| | 41″ Width | 04.15.755.00 | 4 |
| | 52″ Width | 04.15.756.00 | 4 |
| | 60″ Width | 04.15.075.00 | 4 |
| 15 | Blanket Heating Element, Center Shelf | | |
| | 24″ Width, 120 V | 02.05.320.00 | 1 |
| | 30″ Width, 120 V | 02.05.214.00 | 1 |
| | 36″ Width, 120 V | 02.05.212.00 | 1 |
| | 41″ Width, 120, 120/208–240 V | 02.05.209.00 | 1 |
| | 52″ Width, 120, 120/208–240 V | 02.05.205.00 | 1 |
| | 60″ Width, 120/208–240 V | 02.05.288.00 | 1 |
| | 24″ Width, 220/230/240 V | 02.05.975.00 | 1 |
| | 30″ Width, 220/230/240 V | 02.05.223.00 | 1 |
| | 36″ Width, 220/230/240 V | 02.05.221.00 | 1 |
| | 41″ Width, 220/230/240 V | 02.05.219.00 | 1 |
| | 52″ Width, 220/230/240 V | 02.05.217.00 | 1 |
| | 60″ Width, 220/230/240 V | 02.05.292.00 | 1 |
| 16 | Blanket Heating Element, Base | | |
| | 24″ Width, 120 V | 02.05.319.00 | 1 |
| | 30″ Width, 120 V | 02.05.213.00 | 1 |
| | 36″ Width, 120 V | 02.05.211.00 | 1 |
| | 41″ Width, 120, 120/208–240 V | 02.05.210.00 | 1 |
| | 52″ Width, 120, 120/208–240 V | 02.05.206.00 | 1 |
| | 60″ Width, 120/208–240 V | 02.05.287.00 | 1 |
| | 24″ Width, 220/230/240 V | 02.05.976.00 | 1 |
| | 30″ Width, 220/230/240 V | 02.05.222.00 | 1 |
| | 36″ Width, 220/230/240 V | 02.05.220.00 | 1 |
| | 41″ Width, 220/230/240 V | 02.05.218.00 | 1 |
| | 52″ Width, 220/230/240 V | 02.05.216.00 | 1 |
| | 60″ Width, 220/230/240 V | 02.05.291.00 | 1 |
| 17 | Leg, 4″ | 05.30.007.00 | 4 |
| 18 | Cord Grip | | |
| | 120 V | 02.20.330.00 | 1–2 |
| | 120/208–240 V | R02.20.259.00 | 1 |
| | 220, 240, 220/230, 230/240 V | R02.20.259.00 | 1 |

The shaded areas contain information for **International models only.**

| Item | Description | Part No. | Qty. |
|---|---|---|---|
| 19 | Power Cord and Plug | | |
| | 120 V, NEMA 5-15P | R02.18.030.00 | 1–2 |
| | 120 V, NEMA 5-15P | R02.18.154.00 | 1–2 |
| | 120 V, NEMA 5-20P | 02.18.089.00 | 1 |
| | 120/208–240 V, NEMA 14-20P | 02.18.085.00 | 1 |
| | 120/208–240 V, NEMA L14-20P | 02.18.128.00 | 1 |
| | 120/208–240 V, NEMA L14-30P | 02.18.139.00 | 1 |
| | 220, 240, 220/230, 230/240 V, 13 A, BS-1363 | 02.18.068.00 | 1 |
| | 220, 220/230 V, CEE 7/7 Schuko, 10 A | 02.18.077.00 | 1 |
| | 220, 220/230 V, CEE 7/7 Schuko, 16 A | 02.18.038.00 | 1 |
| | 240 V, 10 A, AS 3112 | 02.18.207.00 | 1 |
| | 240 V, 15 A, AS 3112 | 02.18.105.00 | 1 |
| | Cord w/o Plug, 16 A | 02.18.075.00 | 1 |
| | Cord w/o Plug, 25 A | 02.18.103.00 | 1 |
| 20 | Transformer * | | |
| | 120 V | 02.17.022.00 | 2 |
| | 220, 240 V | 02.17.023.00 | 2 |
| | 220/230, 230/240 V | 02.17.035.00 | 2 |
| 21 | Relay * | R02.01.050.00 | 4 |
| 22 | Digital Temperature Control * | R02.01.259.00 | 2 |
| 23 | Probe, Digital Temperature Control * | 02.01.418.00 | 2 |
| 24 | Flip-Up Doors (optional, not shown) | | |
| | 24″ Width | SDS24FLIP | 1–2 |
| | 30″ Width | SDS30FLIP | 1–2 |
| | 36″ Width | SDS36FLIP | 1–2 |
| | 41″ Width | SDS41FLIP | 1–2 |
| | 52″ Width | SDS52FLIP | 1–2 |
| | 60″ Width | SDS60FLIP | 1–2 |
| | Wiring Diagram | | |
| | Thermostat Control | | |
| | 120 V, 24″–60″ Width | 10-01-974 | |
| | 220, 240, 220/230, 230/240 V, 30″–60″ Width | 10-01-1301 | |
| | 220, 240 V, 24″ Width | HS2-2798 | |
| | 220/230, 230/240 V, 24″ Width | HS2-3485 | |
| | Digital Temperature Control | | |
| | 120 V, 24″–60″ Width | 10-01-973 | |
| | 220, 240, 220/230, 230/240 V, 30″–60″ Width | 10-01-1300 | |
| | 220, 240 V, 24″ Width | HS2-2792 | |
| | 220/230, 230/240 V, 24″ Width | HS2-3492 | |

* For units with optional Digital Temperature Controller only.

*NOTE: Quantities shown as a range (example = "2–4") are dependent upon the width of a unit.*

*NOTE: The last four digits in a ten digit numerical serial number are the manufacturing date code:* 962506**2204**

Year 2022

Week Four

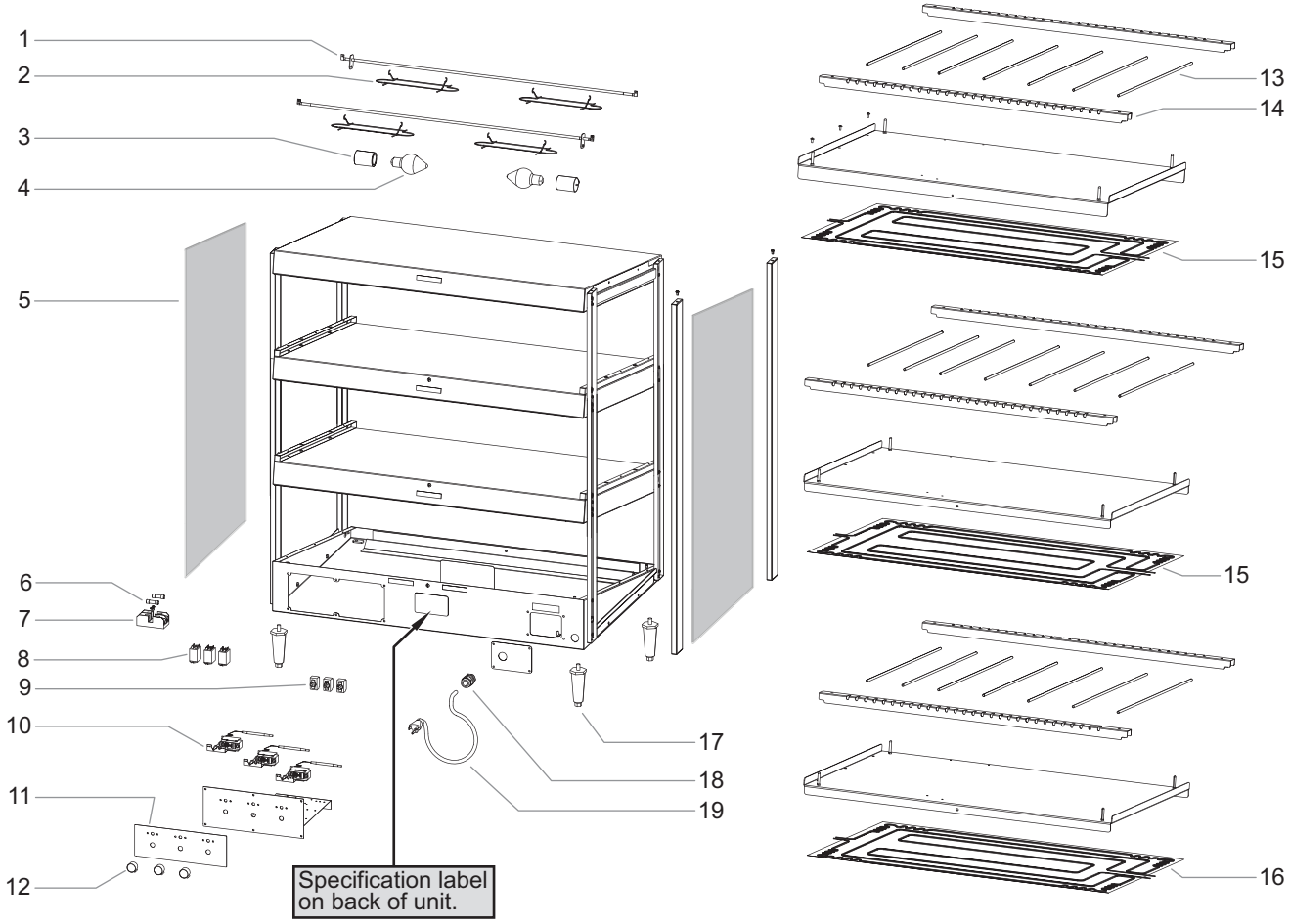
1
2
3
4
5
6
7
8
9
10
11
12
13
14
15
15
16
17
18
19
Specification label on back of unit.

## GRSDS — Triple Shelf Models

| Item | Description | Part No. | Qty. |
|---|---|---|---|
| 1 | Calrod Element | | |
| | 24″ Width, 120 V | R02.08.225D.00 | 6 |
| | 36″ Width, 120/208–240 V | R02.08.223D.00 | 6 |
| | 41″ Width, 120/208–240 V | R02.08.224D.00 | 6 |
| | 52″ Width, 120/208–240 V | R02.08.212D.00 | 6 |
| 2 | Wire Guard | 04.37.145.00 | 6–24 |
| 3 | Light Socket | | |
| | 24″ Width | R02.30.045.00 | 3 |
| | 36″ Width | R02.30.044.00 | 6 |
| | 41″ Width | R02.30.044.00 | 9 |
| | 52″ Width | R02.30.044.00 | 12 |
| 4 | Light Bulb, 120 V | 02.30.265.00 | 6–12 |
| 5 | Glass Side Panel | 04.40.109.00 | 2 |
| 6 | Fuse (2 pack) | R02.03.052.02 | 2 |
| 7 | Fuse Block | 02.03.068.00 | 1 |
| 8 | Relay | 02.01.236.00 | 3 |
| 9 | On/Off Switch | R02.19.008A.00 | 3 |
| 10 | Thermostat, Base | | |
| | Date Code 2418 and newer | 02.16.231.00 | 3 |
| | Date Code 2417 and older | R02.16.039.00 | 3 |
| 11 | Label, Thermostat | | |
| | Date Code 2406 and newer | 07.01.572.00 | 1 |
| | Date Code between 2033 and 2406 | 07.01.533.00 | 1 |
| | Date Code 2032 and older | 07.03.134.00 | 3 |
| 12 | Knob, Thermostat | 05.30.039.00 | 3 |
| 13 | Divider Rods | 04.15.112.00 | 15–30 |
| 14 | Channel Divider | | |
| | 24″ Width | 04.15.054.00 | 6 |
| | 36″ Width | 04.15.754.00 | 6 |
| | 41″ Width | 04.15.755.00 | 6 |
| | 52″ Width | 04.15.756.00 | 6 |
| 15 | Blanket Heating Element, Center Shelves | | |
| | 24″ Width, 120 V | 02.05.320.00 | 2 |
| | 36″ Width, 120/208–240 V | 02.05.212.00 | 2 |
| | 41″ Width, 120/208–240 V | 02.05.210.00 | 2 |
| | 52″ Width, 120/208–240 V | 02.05.206.00 | 2 |
| 16 | Blanket Heating Element, Base | | |
| | 24″ Width, 120 V | 02.05.319.00 | 1 |
| | 36″ Width, 120/208–240 V | 02.05.211.00 | 1 |
| | 41″ Width, 120/208–240 V | 02.05.209.00 | 1 |
| | 52″ Width, 120/208–240 V | 02.05.205.00 | 1 |

| Item | Description | Part No. | Qty. |
|---|---|---|---|
| 17 | Leg, 4″ | 05.30.007.00 | 4 |
| 18 | Cord Grip | R02.20.259.00 | 1 |
| 19 | Power Cord and Plug | | |
| | 120 V, NEMA 5-20P | 02.18.185.00 | 1 |
| | 120/208–240 V, NEMA L14-20P | 02.18.128.00 | 1 |
| | 120/208–240 V, NEMA L14-30P | 02.18.314.00 | 1 |
| 20 | Flip-Up Doors (optional, not shown) | | |
| | 24″ Width | SDS24FLIP | 3 |
| | 36″ Width | SDS36FLIP | 3 |
| | 41″ Width | SDS41FLIP | 3 |
| | 52″ Width | SDS52FLIP | 3 |
| | Wiring Diagram | | |
| | 24″ Width, 120 V | 10-01-606 | |
| | 36″ Width, 120/208–240 V | 10-01-620 | |
| | 41″ Width, 120/208–240 V | 10-01-1682 | |
| | 52″ Width, 120/208–240 V | 10-01-1682 | |

*NOTE: Quantities shown as a range (example = "2–4") are dependent upon the width of a unit.*

*NOTE: The last four digits in a ten digit numerical serial number are the manufacturing date code:* 962506**2204**

Year 2022

Week Four

# AUTHORIZED PARTS DISTRIBUTORS • DISTRIBUTEURS DE PIÈCES AUTORISÉS

**ALABAMA**
Jones McLeod Appl. Svc.
Birmingham 205-251-0159

**ARIZONA**
Tech 24
Phoenix 602-234-2443

Byassee Equipment Co.
Phoenix 602-252-0402

**CALIFORNIA**
Industrial Electric
Commercial Parts & Service, Inc.
Huntington Beach 714-379-7100

Chapman Appl. Service
San Diego 619-298-7106

P & D Appliance
Commercial Parts & Service, Inc.
S. San Francisco 650-635-1900

**COLORADO**
Hawkins Commercial Appliance
Englewood 303-781-5548

**FLORIDA**
Whaley Foodservice Repair
Jacksonville 904-725-7800

Whaley Foodservice Repair
Orlando 407-757-0851

B.G.S.I./Heritage
Pompano Beach 954-971-0456

Comm. Appliance Service
Tampa 813-663-0313

**GEORGIA**
Heritage Service Group
Norcross 866-388-9837

**HAWAII**
Burney's Comm. Service, Inc.
Honolulu 808-848-1466

Food Equip Parts & Service
Honolulu 808-847-4871

**ILLINOIS**
Parts Town
Addison 708-865-7278

Eichenauer Elec. Service
Decatur 217-429-4229

Midwest Elec. Appl. Service
Elmhurst 630-279-8000

Cone's Repair Service
Moline 309-797-5323

**IOWA**
Goodwin Tucker Group
Des Moines 515-262-9308

**KENTUCKY**
Tech 24
Lexington 859-254-8854

Tech 24
Louisville 502-451-5411

**LOUISIANA**
Chandlers Parts & Service
Baton Rouge 225-272-6620

**MARYLAND**
Electric Motor Service
Baltimore 410-467-8080

**MASSACHUSETTS**
Ace Service Co., Inc.
Needham 781-449-4220

**MICHIGAN**
Bildons Appliance Service
Detroit 248-478-3320

Commercial Kitchen Service
Bay City 989-893-4561

Midwest Food Equip. Service
Grandville 616-261-2000

**MISSOURI**
General Parts
Kansas City 816-421-5400

Commercial Kitchen Services
St. Louis 314-890-0700

Kaemmerlen Parts & Service
St. Louis 314-535-2222

**NEBRASKA**
Anderson Electric
Omaha 402-341-1414

**NEVADA**
Burney's Commercial
Las Vegas 702-736-0006

Hi. Tech Commercial Service
N. Las Vegas 702-649-4616

**NEW JERSEY**
Jay Hill Repair
Fairfield 973-575-9145

Service Plus
Flanders 973-691-6300

**NEW YORK**
Alpro Service Co.
Maspeth 718-386-2515

Duffy's - AIS
Buffalo 716-884-7425

3Wire
Plattsburgh 800-634-5005

Duffy's - AIS
Sauquoit 800-836-1014

J.B. Brady, Inc.
Syracuse 315-422-9271

**NORTH CAROLINA**
Authorized Appliance
Charlotte 704-377-4501

**OHIO**
Akron/Canton Comm. Svc. Inc.
Akron 330-753-6634

Tech 24
Cincinnati 513-772-6600

Commercial Parts and Service
Columbus 614-221-0057

Electrical Appl. Repair Service
Brooklyn Heights 216-459-8700

E. A. Wichman Co.
Toledo 419-385-9121

**OKLAHOMA**
Hagar Rest. Service, Inc.
Oklahoma City 405-235-2184

**OREGON**
General Parts Group
Portland 503-624-0890

**PENNSYLVANIA**
Elmer Schultz Services
Philadelphia 215-627-5401

FAST Comm. Appl. Service
Philadelphia 215-288-4800

AIS Commercial Parts and Service
Pittsburgh 412-809-0244

K & D Service Co.
Harrisburg 717-236-9039

Electric Repair Co.
Reading 610-376-5444

**RHODE ISLAND**
Marshall Electric Co.
Providence 401-331-1163

**SOUTH CAROLINA**
Whaley Foodservice Repair
Lexington 803-996-9900

**TENNESSEE**
Camp Electric
Memphis 901-527-7543

**TEXAS**
Armstrong Repair Service
Houston 713-666-7100

Cooking Equipment Specialist
Mesquite 972-686-6666

Commercial Kitchen Repair Co.
San Antonio 210-735-2811

**UTAH**
La Monica's Rest. Equip. Service
Murray 801-263-3221

**VIRGINIA**
Daubers
Norfolk 757-855-4097

Daubers
Springfield 703-866-3600

**WASHINGTON**
3Wire
Seattle 800-207-3146

**WISCONSIN**
A.S.C., Inc.
Madison 608-246-3160

A.S.C., Inc.
Milwaukee 414-543-6460

## CANADA

**ALBERTA**
Key Food Equipment Service
Edmonton 780-438-1690

**BRITISH COLUMBIA**
Key Food Equipment Service
Vancouver 604-433-4484

Key Food Equipment Service
Victoria 250-920-4888

**MANITOBA**
Air Rite, Inc.
Winnipeg 204-895-2300

**NEW BRUNSWICK**
EMR Services, Ltd.
Moncton 506-855-4228

**ONTARIO**
R.G. Henderson Ltd.
Toronto 416-422-5580

Choquette - CKS, Inc.
Ottawa 613-739-8458

**QUÉBEC**
Choquette - CKS, Inc.
Montreal 514-722-2000

Choquette - CKS, Inc.
Québec City 418-681-3944

## UNITED KINGDOM

Marren Group
Northants +44(0)1933 665313

**HATCO CORPORATION**
**P.O. Box 340500**
**Milwaukee, WI 53234-0500 U.S.A.**
**414-671-6350**
**partsandservice@hatcocorp.com**
**www.hatcocorp.com**

24/7 24 Hour 7 Day Parts and Service Assistance available in the United States and Canada by calling 414-671-6350.