FACTORY WIRING
FIELD WIRING
* REQUIRED FOR OUTDOOR MODELS
THIS WIRING DIAGRAM IS APPLICABLE TO UNADA FAN MOTOR USE ONLY

POWER LEADS FROM DISCONNECT SWITCH 208-230/60/1

CONNECT INCOMING POWER LEADS FROM DISCONNECT SWITCH TO L1 AND L2 CONSISTENT WITH NAMEPLATE VOLTAGE AND FREQUENCY. USE COPPER CONDUCTORS ONLY.

(D)PFE100BT3
(D)PFE150BT3
(D)PFE200BT3
(D)PCE050BT3
(D)PCE075BT3
(D)PCE100BT3

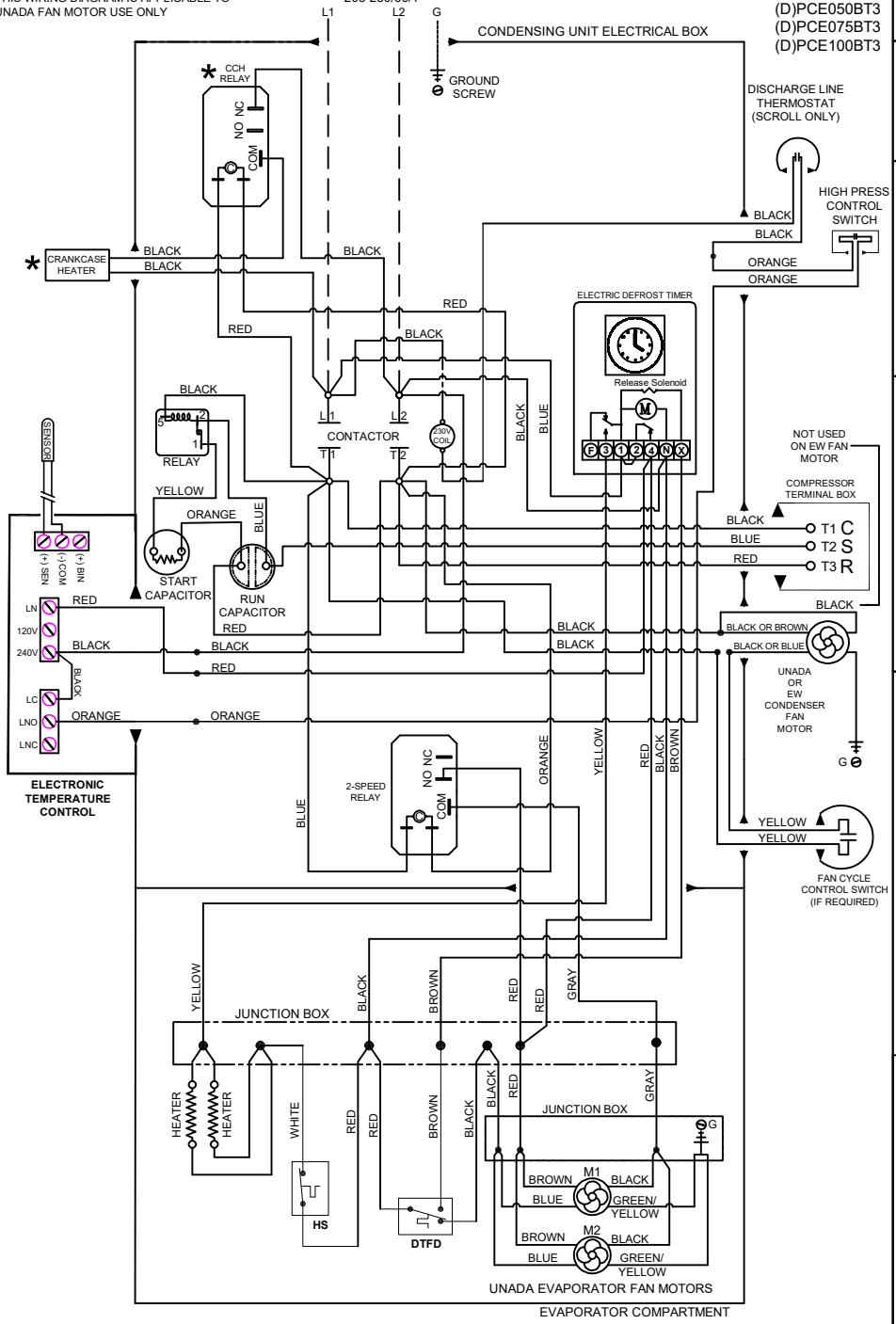

R454C POLAR PAK ELECTRIC DEFROST WIRING DIAGRAM 208-230/1/60

PN 550008561-0
09-10-2024 BKS

NOTE:
SYSTEM IS SUPPLIED WITH A HOT GAS CONDENSATE PAN. A CONDENSATE DRAIN LINE IS NOT REQUIRED.

NOTE:
18" CLEARANCE REQUIRED ON ALL SIDES FOR PROPER OPERATION OF POLAR PAK SYSTEMS.

ITEMS PROVIDED INCLUDE:

1. Liquid Line Filter/Driers
2. Electronic Temp Control (Installed)
3. Expansion Valve (Installed)
4. Scroll Compressor-Copeland
5. High Pressure Switch
6. EC Fan Motors-2 Speed (Evap)

CONFORMS TO ANSI/UL STD 427
CERTIFIED TO CAN/CSA STD C22.2 NO.120-04
Intertek 40807

THIS DRAWING/FILE IS THE PROPERTY OF KOLPAK AND IS STORED IN AN ELECTRONIC DATA BASE. ANY ALTERATIONS OR ADDITIONS MUST BE APPROVED BY KOLPAK ENGINEERING AND CHANGED IN DATA BASE.

SIGNED APPROVED PRINT MUST BE REC'D. B/4 FAB.
☐ APPROVED AS DRAWN
☐ APPROVED AS NOTED
☐ REVISE AND RESUBMIT
SIGNED _____
DATE _____

KOLPAK
A Welbilt Brand
2915 Tennessee Avenue North, Parsons, TN 38363
(731) 847-6361*(800) 826-7036*

REFRIGERATING UNIT – FREEZER

MODEL	PFE150BT3			1.5	HP
VOLTS	208-230	PH	1	CYCLES	60
REFRIGERANT	R454C	34	OZ.		5,280 BTUH
TOTAL LOAD	15.3	AMPS		TOTAL HEAT REJECTED	11,047 BTUH
MIN.CIRCUIT AMPACITY	18.7			EVAP. FAN	0.6 AMPS EA.
MAX.EXTERNAL FUSE SIZE	30			EVAP. FAN	1/20 HP
COMP. RLA	13.6			DEFROST	4.3 AMPS
COMP. LRA	68.0			COND. FAN	0.6 AMPS
LOW SIDE DESIGN PRESS.	230	PSIG		COND. FAN	1/10 HP
HIGH SIDE DESIGN PRESS.	475			WEIGHT	300 LBS.
AWEF					

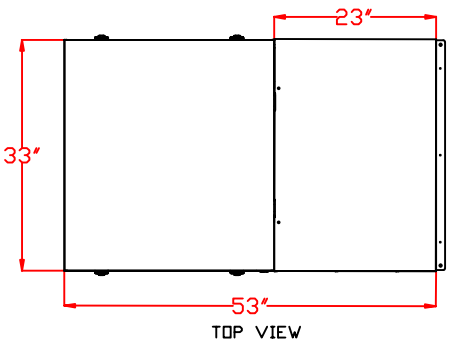

TOP VIEW

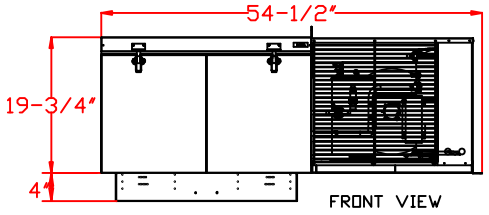

FRONT VIEW

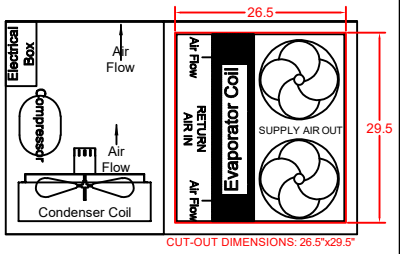

CUT-OUT DIMENSIONS: 26.5"x29.5"

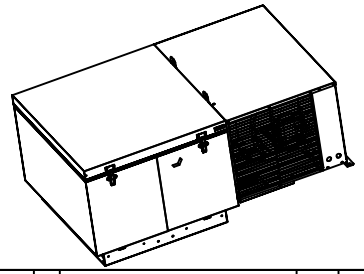

DATE	No.	DESCRIPTION OF CHANGE	AUTH	BY

PFE150BT3 (208-230/1/60)

SCALE: NONE
DEALER:
DRAWN BY: SCG
DATE: 12/20/2024
REVISED
KOLPAK QUOTE NO:
DRAWING NUMBER
PFE150BT3

KOLPAK
A Welbilt Brand