ALTO-SHAAM

Parts Manual

Rotisserie—Electric
Holding Cabinet—Electric

AR-7T
AR-7HT

MN-38261
REV 3
03/2021

Manufacturer's Information

Copyright

© Copyright 03/2021 by Alto-Shaam, Inc.
All rights reserved.
This manual or any portion thereof may not be reproduced or used in any manner whatsoever without the express written permission of Alto-Shaam, Inc

Trademarks

All trademarks referenced in this documentation are the property of their respective owners.

Manufacturer

Alto-Shaam, Inc.
P.O. Box 450
W164 N9221 Water Street
Menomonee Falls, WI 53052

Models Covered
Serial Number

The unit serial number is required for ordering the correct service parts. Record the unit serial number in the space provided below.

Serial Number

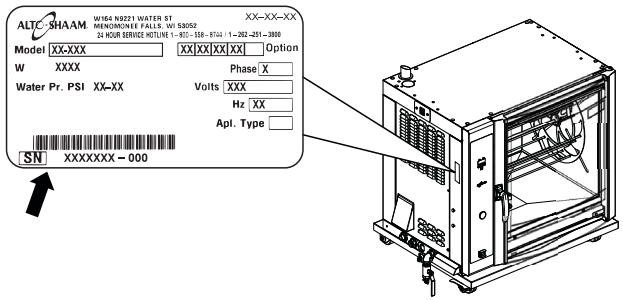

Parts Ordering Information

Original manufacturer's replacement parts may be ordered directly from the Alto-Shaam network of Authorized Service Agents and Parts Distributors. Follow this link for a map to a local partner: **https://www.alto-shaam.com/en/how-to-buy**. If you are an Authorized Service Agent or Parts Distributor, please submit your purchase order to **parts@alto-shaam.com**.

Non-OEM parts may be substituted; however, these parts must be of equal quality and specifications as those provided by Alto-Shaam.

Table of Contents

Manufacturer's Information 2
Table of Contents 3
AR-7T Cavity Core Package, Pass-Thru 4
AR-7T Cavity Core Package, Reach-In 5
AR-7T Core Common Parts 6
AR-7HT Cavity Core Package, Pass-Thru 7
AR-7HT Cavity Core Package, Reach-In 8
AR-7T / AR-7HT Panel Assembly, Reach-In (Stainless Steel) 9
AR-7T / AR-7HT Panel Assembly, Reach-In (Black) 10
AR-7T / AR-7HT Panel Assembly, Reach-In (Burgundy) 11
AR-7T / AR-7HT Panel Assembly, Pass-Thru (Stainless Steel) 12
AR-7T / AR-7HT Panel Assembly, Pass-Thru (Black) 13
AR-7T / AR-7HT Panel Assembly, Pass-Thru (Burgundy) 14
AR-7T Electrical Assembly, 208V 1Ø 15
AR-7T Electrical Assembly, 208V 3Ø 16
AR-7T Electrical Assembly, 240V 1Ø 17
AR-7T Electrical Assembly, 240V 3Ø 18
AR-7T Electrical Assembly, 380V–415V 3Ø 19
AR-7HT Electrical Package, 120V, 208V–240V 1Ø 20
AR-7HT Electrical Package, 230V International 21
AR-7T Electrical Chassis, 208-240V 1Ø 22
AR-7T Electrical Chassis, 208-240V 3Ø 23
AR-7T Electrical Chassis, 380-415V 3Ø 24
AR-7HT Electrical Chassis (all voltages) 25
AR-7HT Power Cords 26
AR-7T / AR-7HT Door Assembly, Curved, RH 27
AR-7T / AR-7HT Door Assembly, Curved, LH 28
AR-7T / AR-7HT Door Assembly, Flat, RH 29
AR-7T / AR-7HT Door Assembly, Flat, LH 30
AR-7T / AR-7HT Door Assembly, Flat Back 31
AR-7T Plumbing/Wash Assembly 32
AR-7T Tablet Soap Injection Package 33
AR-7T Liquid Soap Injection Package, Alto-Shaam Cleaner 34
AR-7T Liquid Soap Injection Package, Ecolab Cleaner 35
AR-7T Spit Assembly, 7-Spit, V-Spit, Standard 36
AR-7T Spit Assembly, 7-Spit, Pierce Only 37
AR-7T Spit Assembly, 7-Spit, V-Spits Only 38
AR-7T Spit Assembly, 7-Spit, Pierce and Baskets 39
AR-7T Spit Assembly, 7-Spit, Baskets Only 40
AR-7T Spit Assembly, Large V-Spit Package 41
AR-7HT Rack Package 42

AR-7T Cavity Core Package, Pass-Thru

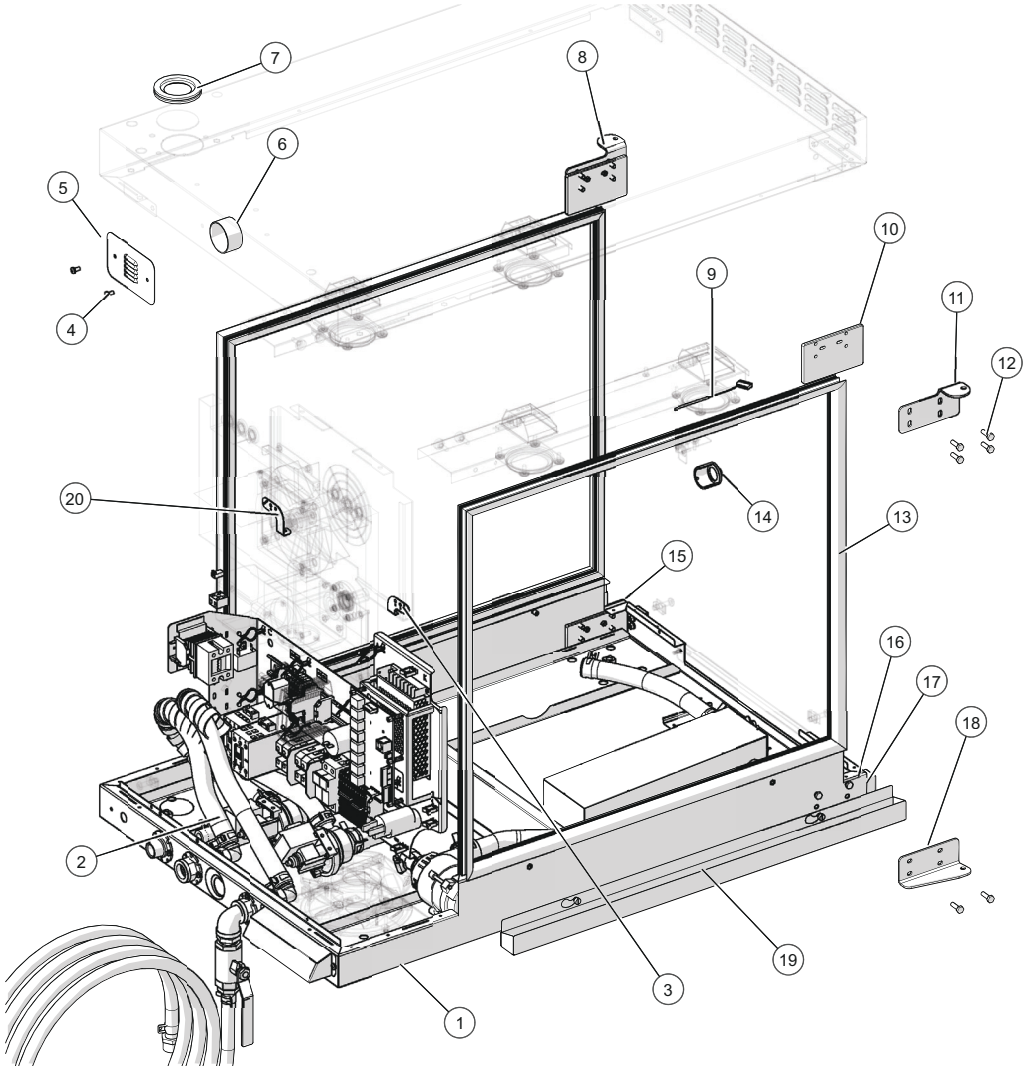

ID	Part No.	Description
1	5019775	CORE COMMON PARTS
2	5022269	PLUMBING,WASH,AR-7T
3	1013187	LOCK,DIRECTIONAL,PANEL, LOWER
4	SC-22766	SCREW,M5x0.8X10MM PAN
5	1021200	AIR INTAKE MOUNTING PLATE
6	1021712	TUBE, COUPLING
7	BU-28391	BUSHING, SOCKET, MEMBRANE
8	1033643	HINGE, UPPER, LH, SLOTTED
9	5023738	SENSOR ASSY,100 OHM
10	1023603	PLATE,HINGE,SUPPORT,AR-7/AR-7T
11	1033639	HINGE, UPPER, RH, SLOTTED
12	SC-28256	SCREW, M6 X 20 HEX S/S HD
13	GS-37359	DOOR GASKET
14	BK-46367	HOUSING, BUSHING
15	1033646	HINGE, LOWER, LH, SLOTTED
16	1024505	PLATE,HINGE,SUPPORT,BOTTOM
17	BK-38799	BLOCK,DOOR,STOP,AR-7
18	1033641	HINGE, LOWER, RH, SLOTTED
19	5018765	DRIP TRAY PKG, NO DRAIN
20	1013207	LOCK,DIRECTIONAL,PANEL, UPPER

AR-7T Cavity Core Package, Reach-In

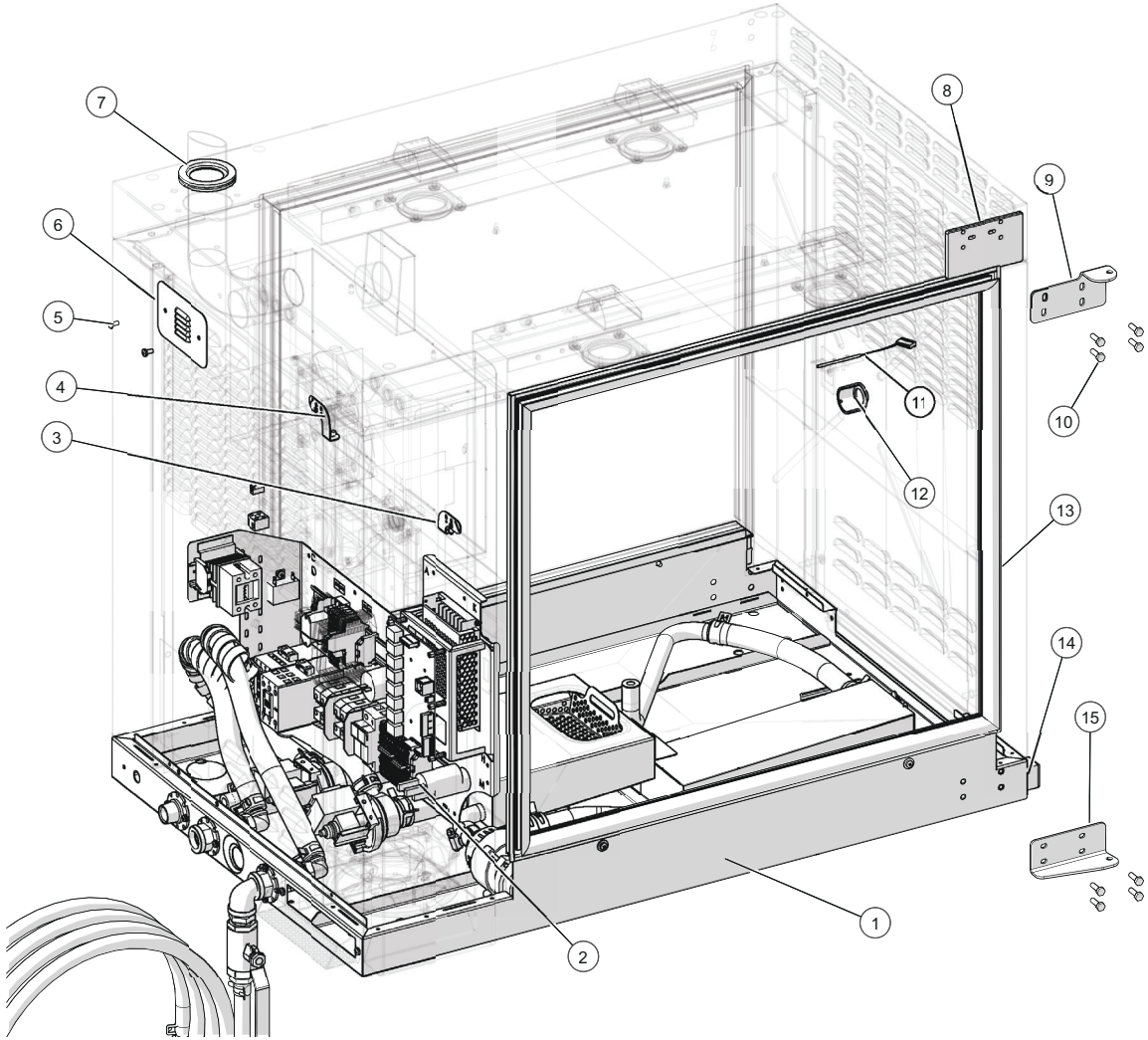

ID	Part No.	Description
1	5019775	CORE COMMON PARTS
2	5022269	PLUMBING,WASH,AR-7T
3	1013187	LOCK,DIRECTIONAL,PANEL, LOWER
4	1013207	LOCK,DIRECTIONAL,PANEL, UPPER
5	SC-22766	SCREW,M5x0.8X10MM PAN
6	1021200	AIR INTAKE MOUNTING PLATE
7	BU-28391	BUSHING, SOCKET, MEMBRANE
8	1023603	PLATE,HINGE,SUPPORT,AR-7/AR-7T
9	1033639	HINGE, UPPER, RH, SLOTTED
10	SC-28256	SCREW, M6 X 20 HEX S/S HD
11	5023738	SENSOR ASSY,100 OHM
12	BK-46367	HOUSING, BUSHING
13	GS-37359	DOOR GASKET
14	BK-38799	BLOCK,DOOR,STOP,AR-7
15	1033641	HINGE, LOWER, RH, SLOTTED

AR-7T Core Common Parts

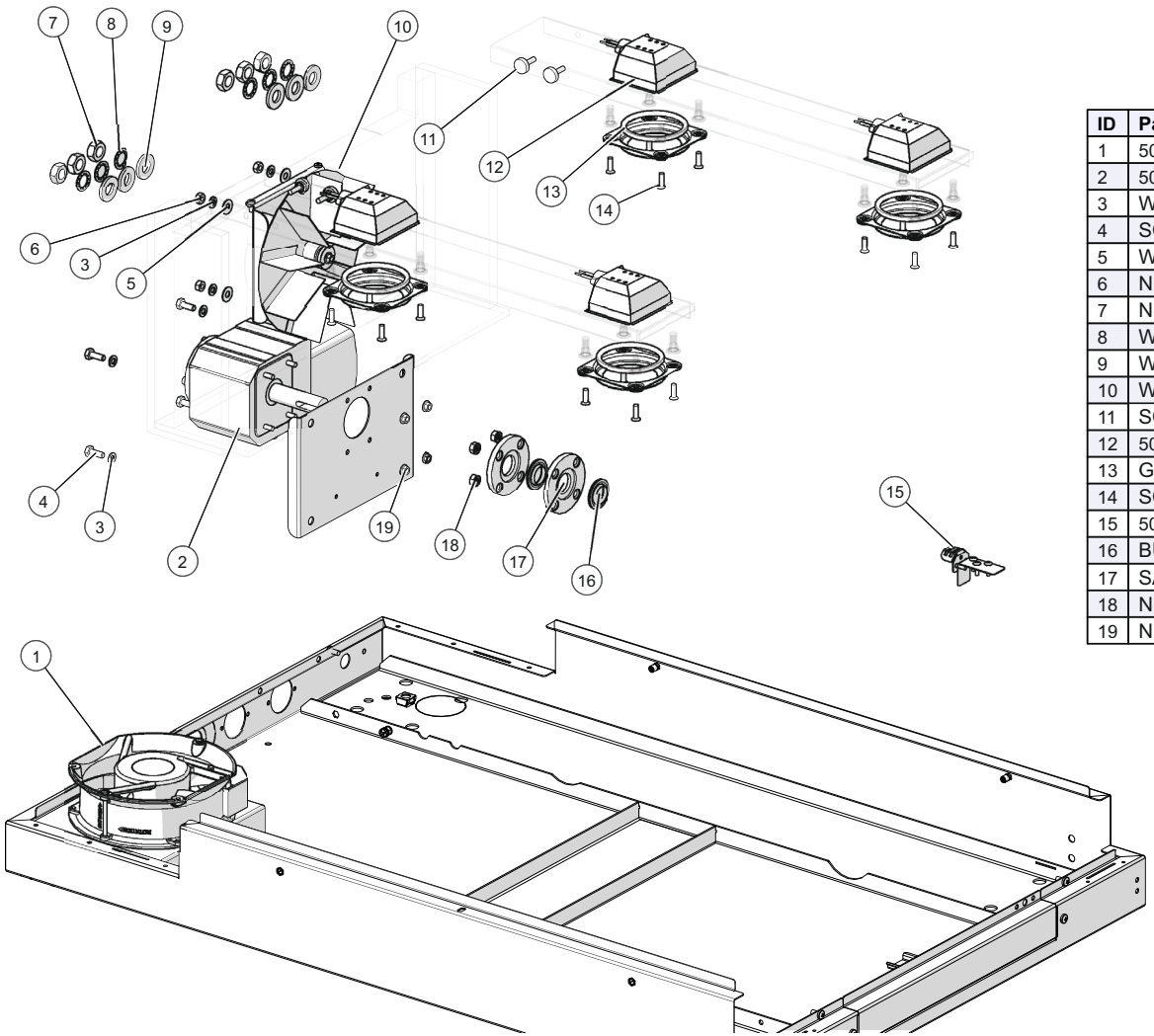

ID	Part No.	Description
1	5018772	ASSEMBLY, FAN, AR-7
2	5023741	MOTOR ASSY,AC,DRIVE
3	WS-22302	WASHER, M6 SPLIT LOCK
4	SC-22284	SCREW, M6 X 16 HEX S/S HD
5	WS-22094	WASHER, 1/4", FLAT, 5/8 OD 18-8 SS
6	NU-22291	M6-1.0 X HEX S/S NUT 18-8
7	NU-39759	NUT, HEX JAM, 1/2-20 UNF
8	WS-26291	WASHER, 1/2" LOCK, 410 S/S
9	WS-39758	WASHER, FLAT, 1/2" ID,18-8 SST
10	WH-37079	FAN WHEEL-175 DIA.X40MM WIDE
11	SC-38381	SCREW, THUMB, M5 X 16
12	5018971	LIGHT ASSEMBLY
13	GL-38608	GLASS, ROUND, CLEAR
14	SC-22281	SCREW, M5 X 16 FLAT HEAD CSINK
15	5018891	PROBE HOLDER ASSEMBLY, CAVITY
16	BU-27387	BUSHING, SEAL, ROTO SHAFT
17	SA-39647	GLAND, SEAL, Ø19MM
18	NU-35844	NUT, KEPS, M6X1.0, SS
19	NU-38212	NUT,M5-0.8 HEX FLG-SERR CL8 SS

AR-7HT Cavity Core Package, Pass-Thru

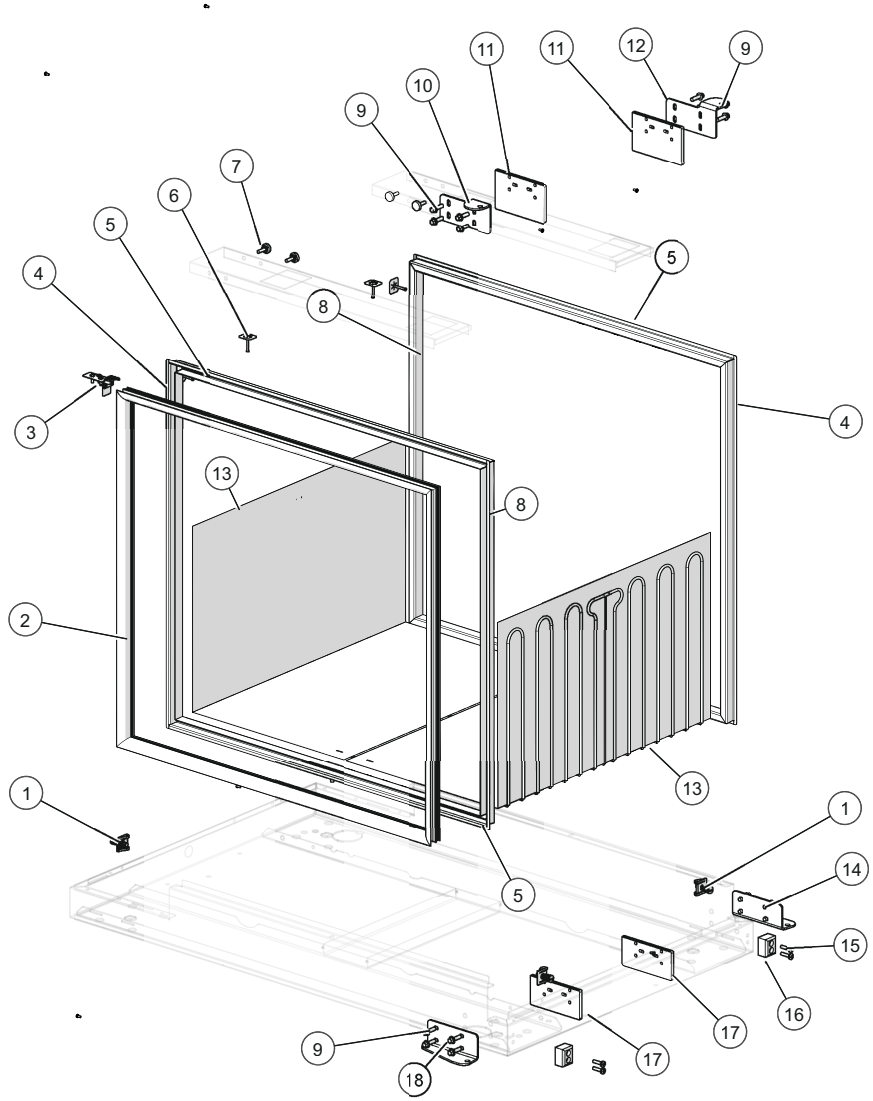

ID	Part No.	Description
1	5018984	ACCESS PANEL FASTENER ASSY.
2	GS-37359	DOOR GASKET
3	5018891	PROBE HOLDER ASSEMBLY, CAVITY
4	1017388	GASKET CHANNEL, LEFT SIDE
5	1017385	GASKET CHANNEL,UPPER/LOWER
6	CL-22259	CLIP, INSULATION PIN
7	SC-38381	SCREW, THUMB, M5 X 16
8	1017542	GASKET CHANNEL, RIGHT SIDE
9	SC-28256	SCREW, M6X1X20MM HEX FLG
10	1033639	HINGE, UPPER, RH, SLOTTED
11	1023603	PLATE,HINGE,SUPPORT,AR-7/AR-7T
12	1033643	HINGE, UPPER, LH, SLOTTED
13	EL-37168	ELEMENT, FOIL HEAT PAD, 725W
14	1033646	HINGE, LOWER, LH, SLOTTED
15	SC-22779	M5-0.8 X 20 MM, PH PAN HD, M/S
16	BK-38799	BLOCK,DOOR,STOP,AR-7
17	1024505	PLATE,HINGE,SUPPORT,BOTTOM
18	1033641	HINGE, LOWER, RH, SLOTTED

AR-7HT Cavity Core Package, Reach-In

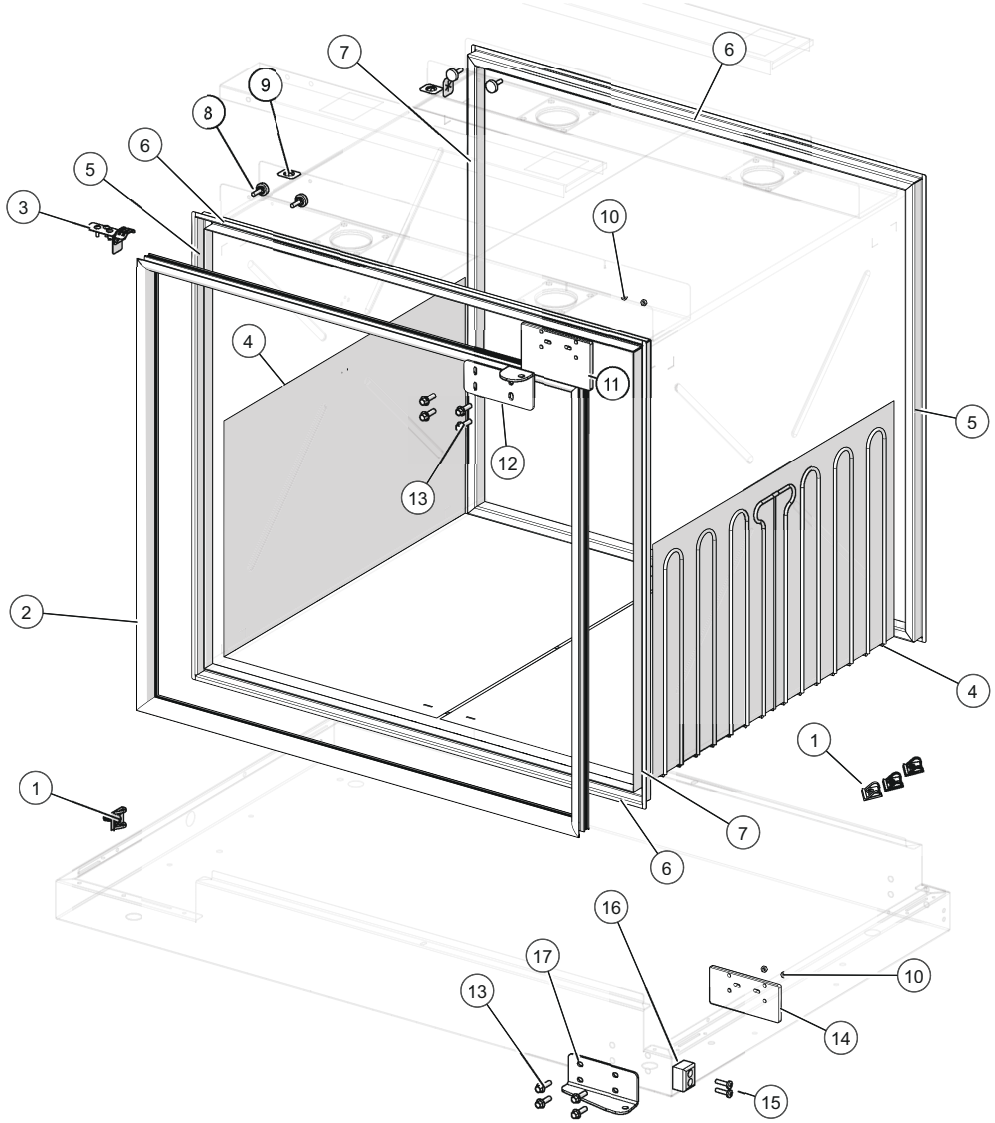

ID	Part No.	Description
1	CL-22196	CLIP, CT,HOLDING, M6
2	GS-37359	DOOR GASKET
3	5018891	PROBE HOLDER ASSEMBLY, CAVITY
4	EL-37168	ELEMENT, FOIL HEAT PAD, 725W
5	1017388	GASKET CHANNEL, LEFT SIDE
6	1017385	GASKET CHANNEL,UPPER/LOWER
7	1017542	GASKET CHANNEL, RIGHT SIDE
8	SC-38381	SCREW, THUMB, M5 X 16
9	CL-22259	CLIP, INSULATION PIN
10	NU-22286	M4-0.7 HEX NUT 18-8
11	1023603	PLATE,HINGE,SUPPORT,AR-7/AR-7T
12	1033639	HINGE, UPPER, RH, SLOTTED
13	SC-28256	SCREW, M6X1X20MM HEX FLG
14	1024505	PLATE,HINGE,SUPPORT,BOTTOM
15	SC-22779	M5-0.8 X 20 MM, PH PAN HD, M/S
16	BK-38799	BLOCK,DOOR,STOP,AR-7
17	1033641	HINGE, LOWER, RH, SLOTTED

AR-7T / AR-7HT Panel Assembly, Reach-In (Stainless Steel)

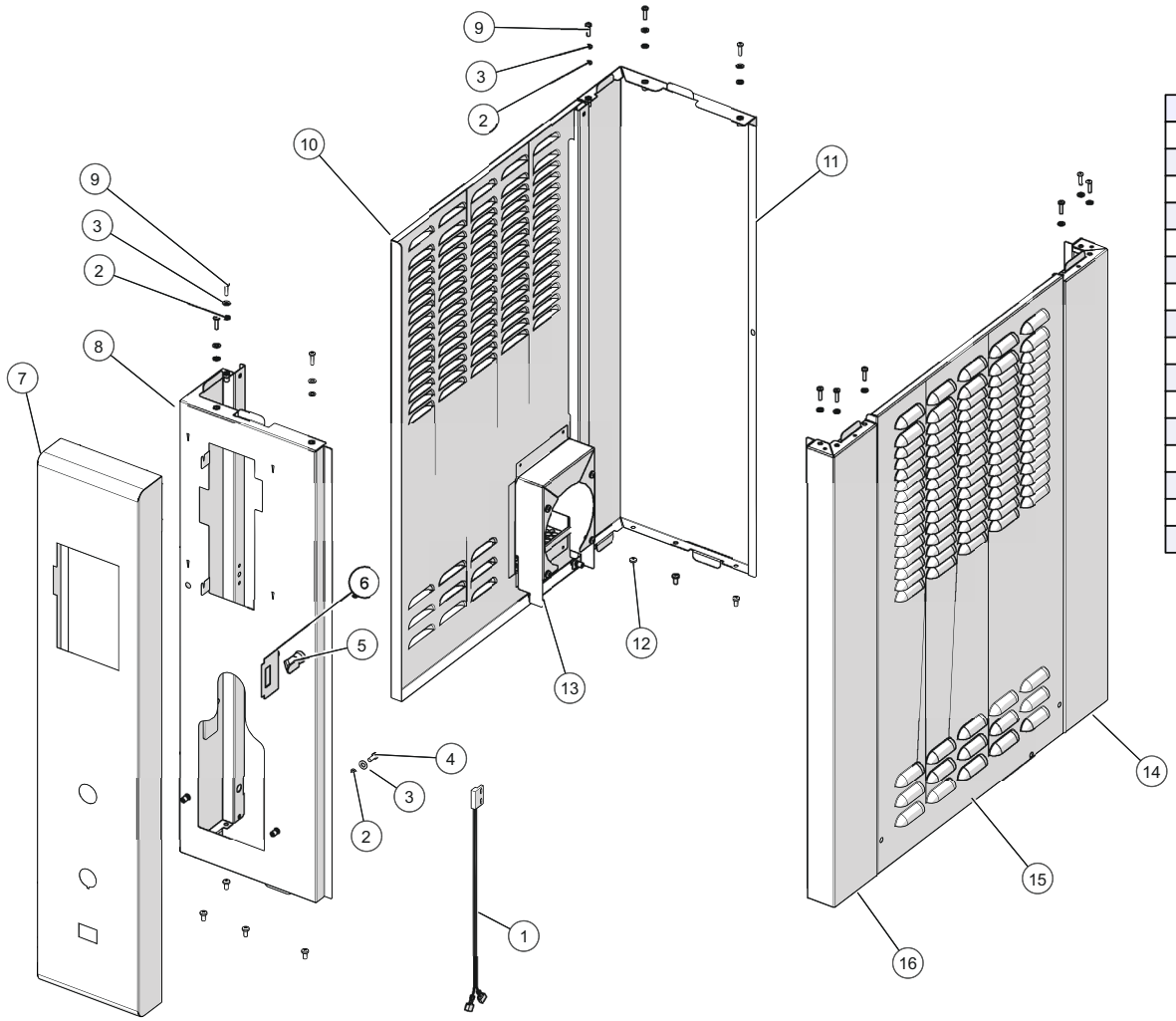

ID	Part No.	Description
1	5023739R	SERVICE KIT, SWITCH ASSY
2	WS-22301	WASHER, M5 SPLIT LOCK
3	WS-2229	WASHER, FLAT
4	SC-26163	SCREW, M5x0.8x12MM HEX
5	LT-38342	LATCH, DOOR, DOG, LONG NOSE
6	5023739	SWITCH ASSY,PROXIMITY SENSOR
7	5019977	BUMP-OUT CNTL CORNER, RH, SS
8	1024074	PANEL, CONTROL, BUMP OUT
9	SC-38240	SCREW,M4x0.7X16MM PAN
10	5024068	ASSEMBLY,ACCESS PANEL,S/S
11	1016847	PANEL, NON-CTRL SIDE, RH
12	SC-22766	SCREW,M5x0.8X10MM PAN
13	5024080	PANEL ACCESS FAN ASSY
14	1016848	PANEL, RIGHT, REAR, STAINLESS
15	1017501	PANEL ACCESS, NON-CTRL SIDE
16	1016849	PANEL, RIGHT, FRONT, STAINLESS

AR-7T / AR-7HT Panel Assembly, Reach-In (Black)

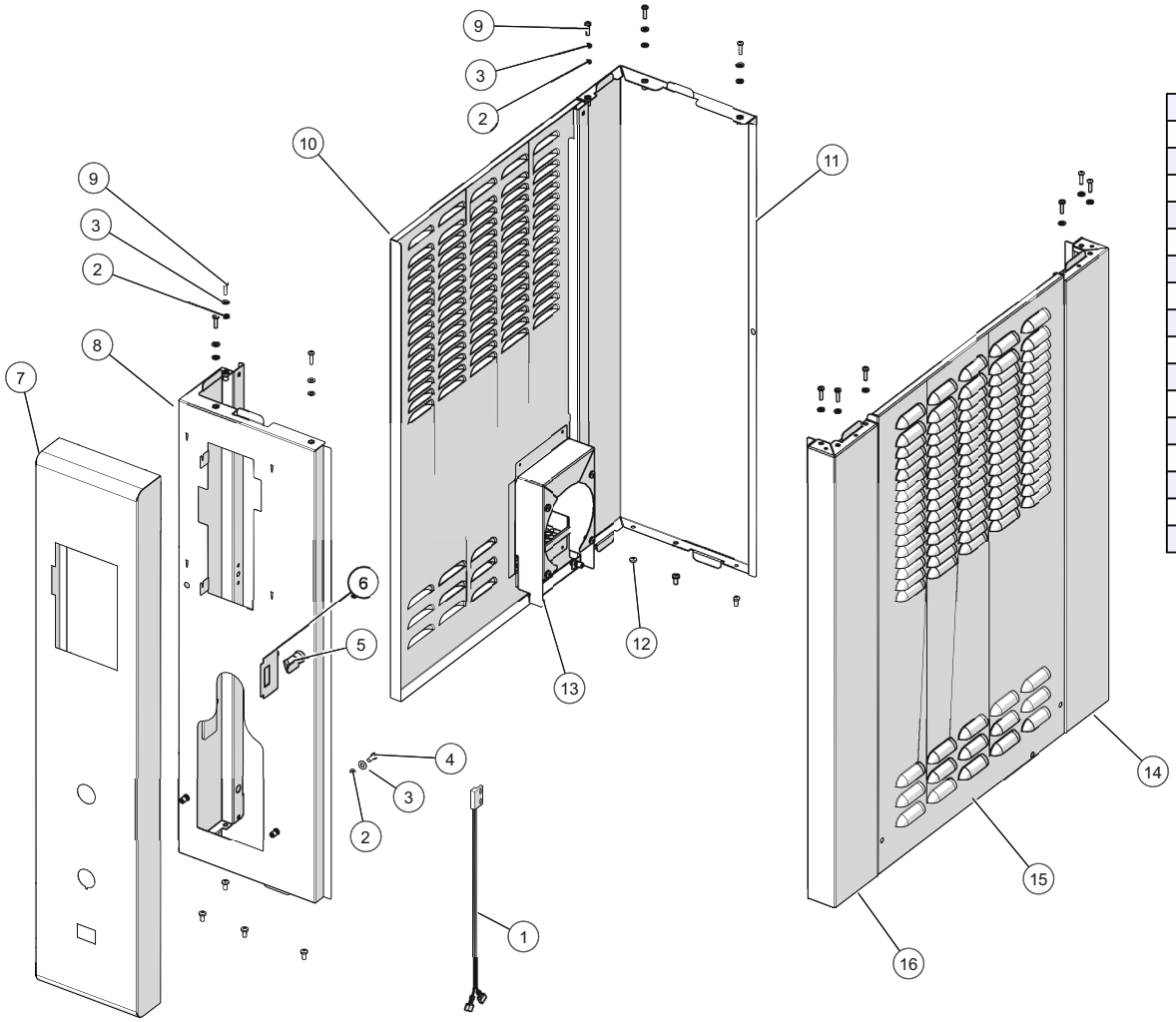

ID	Part No.	Description
1	5023739R	SERVICE KIT, SWITCH ASSY
2	WS-22301	WASHER, M5 SPLIT LOCK
3	WS-2229	WASHER, FLAT
4	SC-26163	SCREW, M5x0.8x12MM HEX
5	LT-38342	LATCH, DOOR, DOG, LONG NOSE
6	5023739	SWITCH ASSY,PROXIMITY SENSOR
7	5020258	BUMP-OUT CNTL CORNER, RH, BLK
8	1024074	PANEL, CONTROL, BUMP OUT
9	SC-38240	SCREW,M4x0.7X16MM PAN
10	5024069	ASSEMBLY,ACCESS PANEL,BLK
11	1017488	PANEL, NON-CTRL SIDE RH BLK
12	SC-22766	SCREW,M5x0.8X10MM PAN
13	5024080	PANEL ACCESS FAN ASSY
14	1017485	PANEL, RIGHT, REAR, BLACK
15	1017502	PANEL ACCESS, NON-CTRL SIDE BLK
16	1017483	PANEL, RIGHT, FRONT, BLACK

AR-7T / AR-7HT Panel Assembly, Reach-In (Burgundy)

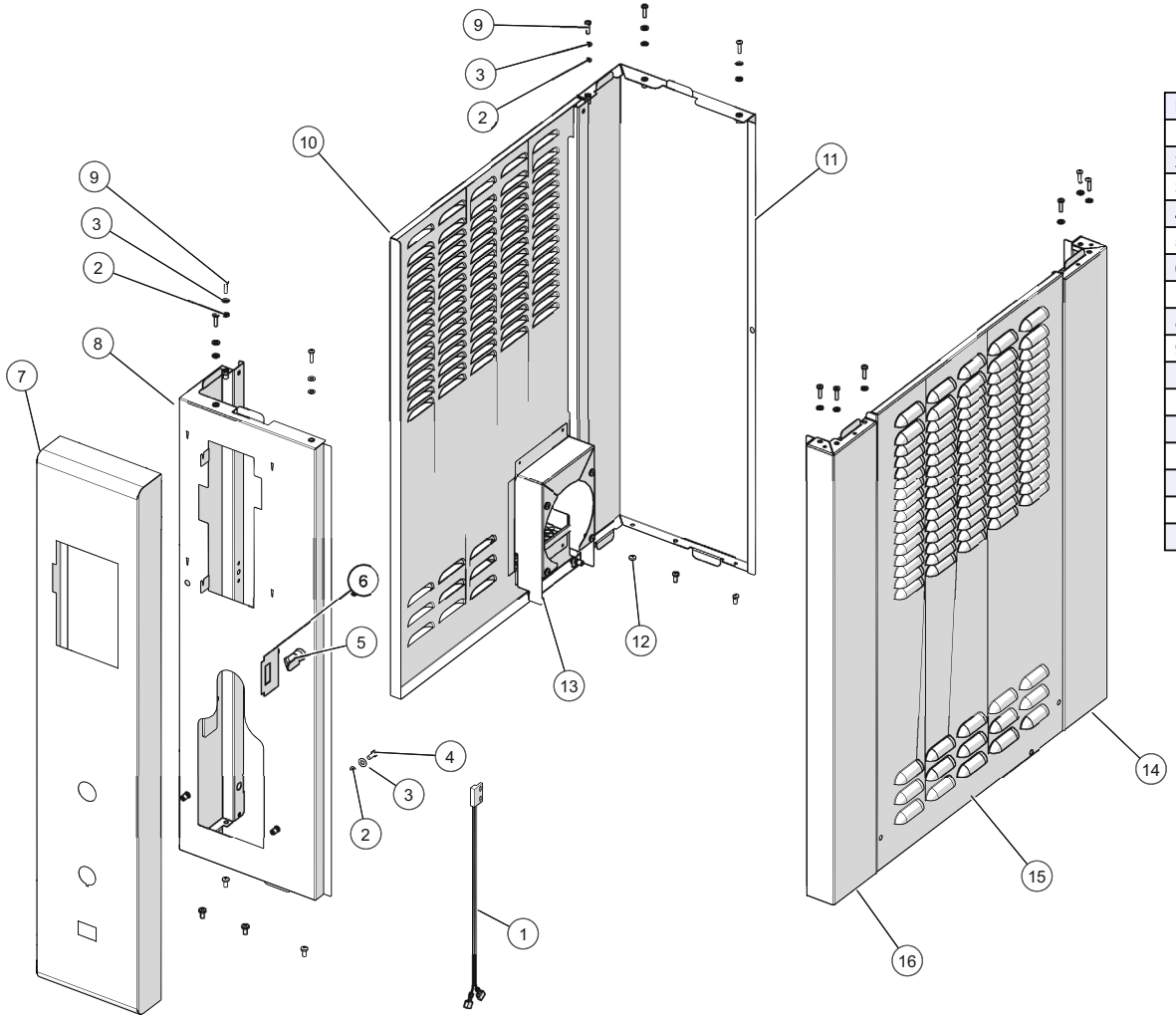

ID	Part No.	Description
1	5023739R	SERVICE KIT, SWITCH ASSY
2	WS-22301	WASHER, M5 SPLIT LOCK
3	WS-2229	WASHER, FLAT
4	SC-26163	SCREW, M5x0.8x12MM HEX
5	LT-38342	LATCH, DOOR, DOG, LONG NOSE
6	5023739	SWITCH ASSY,PROXIMITY SENSOR
7	5020259	BUMP-OUT CNTL CORNER, RH, BUR
8	1024074	PANEL, CONTROL, BUMP OUT
9	SC-38240	SCREW,M4x0.7X16MM PAN
10	5024070	ASSEMBLY,ACCESS PANEL,BUR
11	1017489	PANEL, NON-CTRL SIDE, RH, BUR
12	SC-22766	SCREW,M5x0.8X10MM PAN
13	5024080	PANEL ACCESS FAN ASSY
14	1017486	PANEL, RIGHT, REAR, BUR
15	1017503	PANEL ACCESS, NON-CTRL SIDE BUR
16	1017484	PANEL, RIGHT, FRONT, BUR

AR-7T / AR-7HT Panel Assembly, Pass-Thru (Stainless Steel)

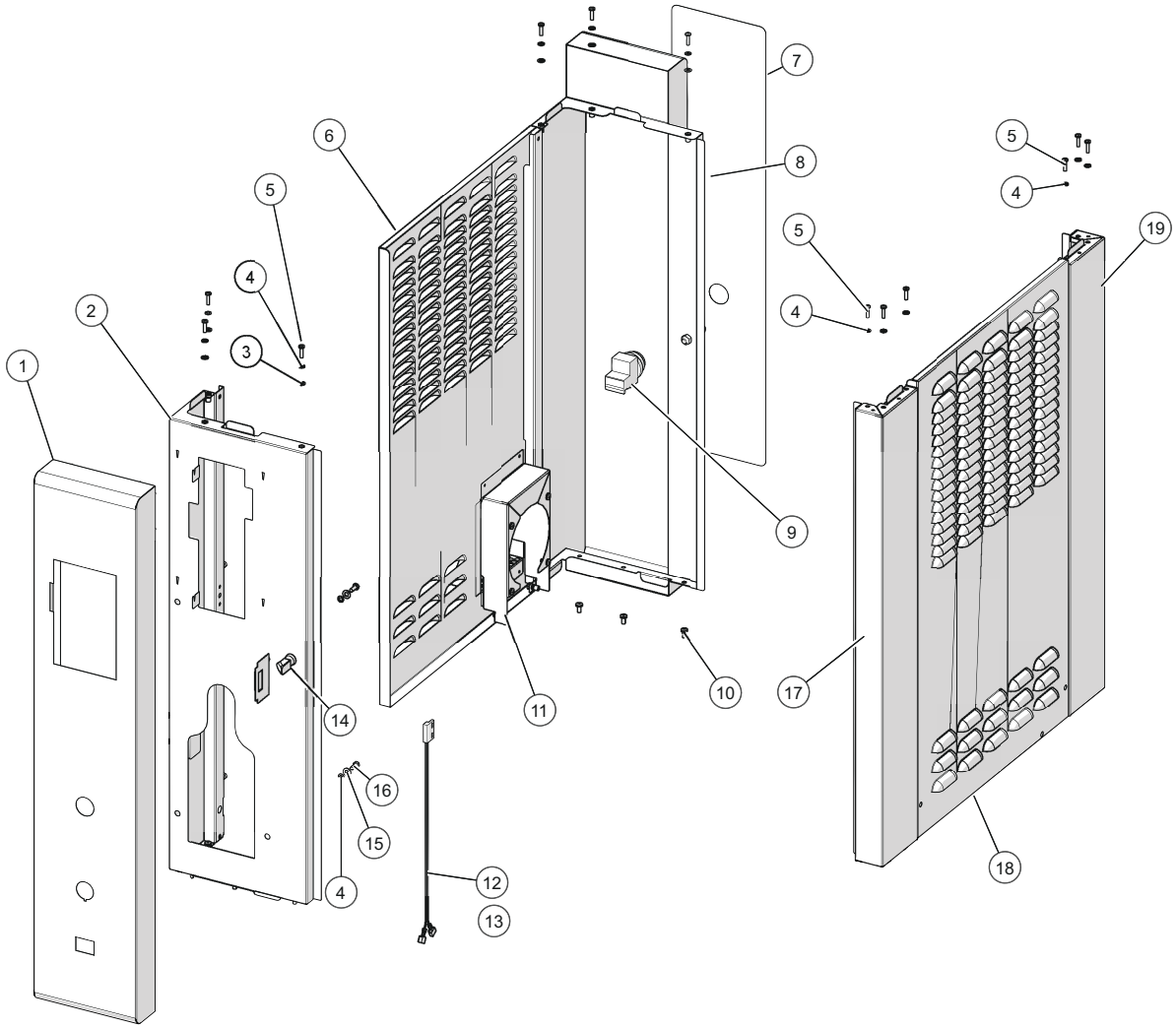

ID	Part No.	Description
1	5019977	BUMP-OUT CNTL CORNER, RH, SS
2	1024074	PANEL, CONTROL, BUMP OUT
3	WS-22295	WASHER, FLAT M5 S/S
4	WS-22301	WASHER, M5 SPLIT LOCK
5	SC-38240	SCREW,M4x0.7X16MM PAN
6	5024068	ASSEMBLY,ACCESS PANEL,S/S
7	PE-38148	AR-7, OVERLAY, P/T COVER
8	5018877	WELDMENT, CTRL SIDE PANEL, LH
9	SW-37276	SWITCH, JOG
10	SC-22766	SCREW,M5x0.8X10MM PAN
11	5024080	PANEL ACCESS FAN ASSY
12	SW-33906	SWITCH, PROXIMITY SENSOR
13	5023739R	SERVICE KIT, SWITCH ASSY
14	LT-38342	LATCH, DOOR, DOG, LONG NOSE
15	WS-22297	WASHER, FLAT
16	SC-26163	SCREW, M5x0.8x12MM HEX
17	1016849	PANEL, RIGHT, FRONT, STAINLESS
18	1017501	PANEL ACCESS, NON-CTRL SIDE
19	1016848	PANEL, RIGHT, REAR, STAINLESS

AR-7T / AR-7HT Panel Assembly, Pass-Thru (Black)

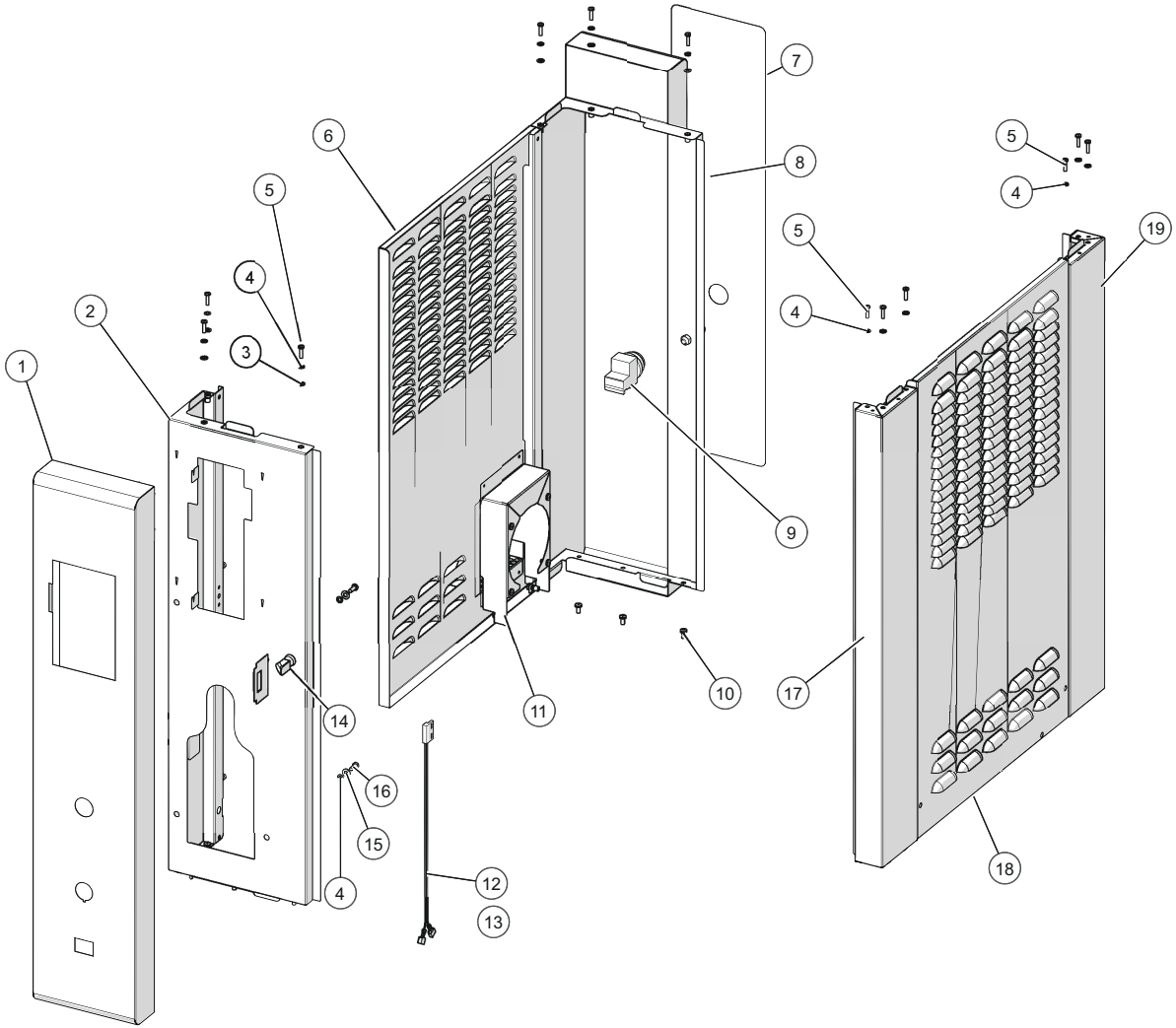

ID	Part No.	Description
1	5020258	BUMP-OUT CNTL CORNER, RH, BLK
2	1024074	PANEL, CONTROL, BUMP OUT
3	WS-22295	WASHER, FLAT M5 S/S
4	WS-22301	WASHER, M5 SPLIT LOCK
5	SC-38240	SCREW,M4x0.7X16MM PAN
6	5024069	ASSEMBLY,ACCESS PANEL,BLK
7	PE-38148	AR-7, OVERLAY, P/T COVER
8	5018877	WELDMENT, CTRL SIDE PANEL, LH
9	SW-37276	SWITCH, JOG
10	SC-22766	SCREW,M5x0.8X10MM PAN
11	5024080	PANEL ACCESS FAN ASSY
12	SW-33906	SWITCH, PROXIMITY SENSOR
13	5023739R	SERVICE KIT, SWITCH ASSY
14	LT-38342	LATCH, DOOR, DOG, LONG NOSE
15	WS-22297	WASHER, FLAT
16	SC-26163	SCREW, M5x0.8x12MM HEX
17	1017483	PANEL, RIGHT, FRONT, BLK
18	1017502	PANEL ACCESS, NON-CTRL, BLK
19	1017485	PANEL, RIGHT, REAR, BLK

AR-7T / AR-7HT Panel Assembly, Pass-Thru (Burgundy)

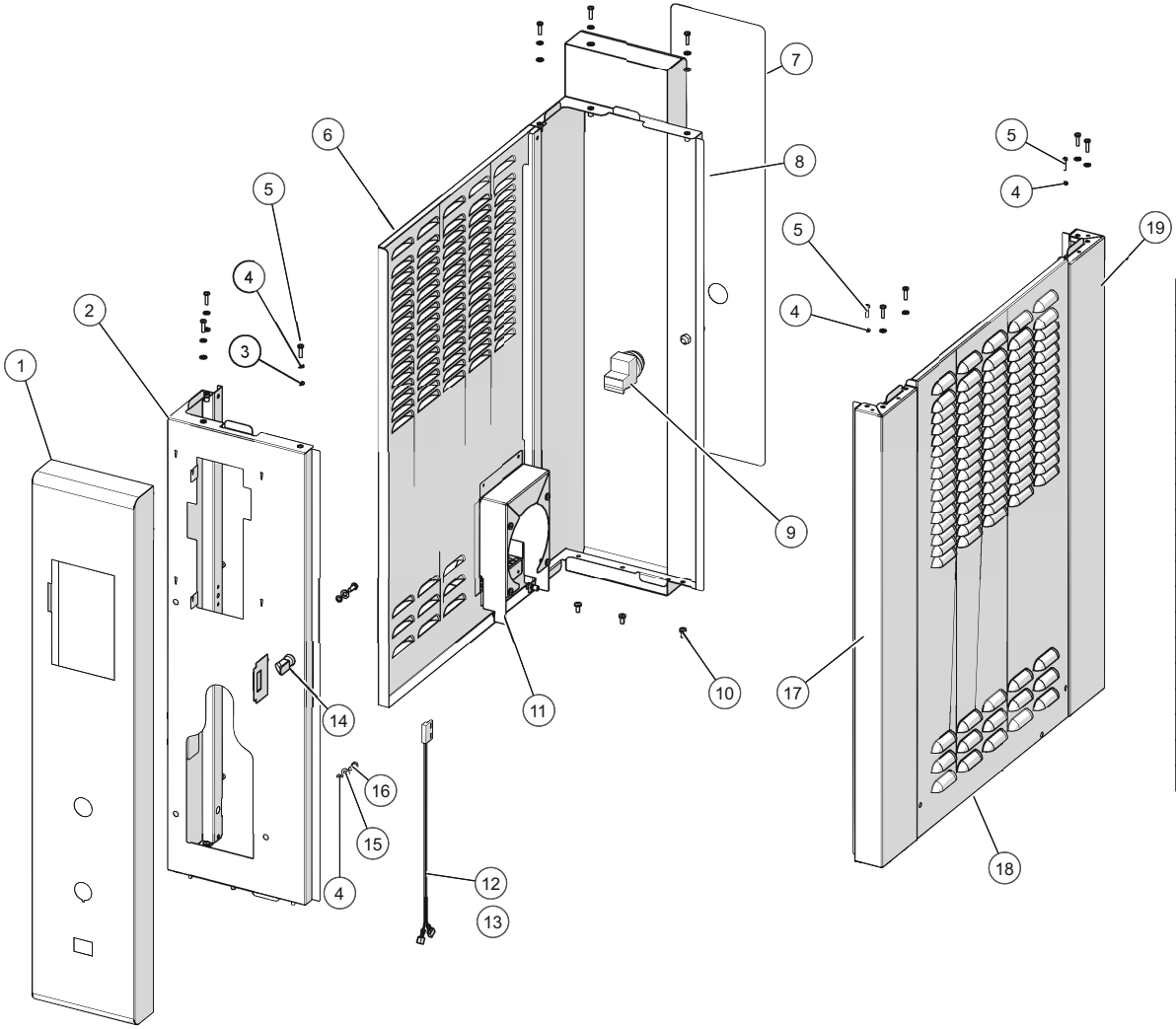

ID	Part No.	Description
1	5020259	BUMP-OUT CNTL CORNER, RH, BUR
2	1024074	PANEL, CONTROL, BUMP OUT
3	WS-22295	WASHER, FLAT M5 S/S
4	WS-22301	WASHER, M5 SPLIT LOCK
5	SC-38240	SCREW,M4x0.7X16MM PAN
6	5024070	ASSEMBLY,ACCESS PANEL,BUR
7	PE-38148	AR-7, OVERLAY, P/T COVER
8	5018877	WELDMENT, CTRL SIDE PANEL, LH
9	SW-37276	SWITCH, JOG
10	SC-22766	SCREW,M5x0.8X10MM PAN
11	5024080	PANEL ACCESS FAN ASSY
12	SW-33906	SWITCH, PROXIMITY SENSOR
13	5023739R	SERVICE KIT, SWITCH ASSY
14	LT-38342	LATCH, DOOR, DOG, LONG NOSE
15	WS-22297	WASHER, FLAT
16	SC-26163	SCREW, M5x0.8x12MM HEX
17	1017483	PANEL, RIGHT, FRONT, BURGUNDY
18	1017501	PANEL ACCESS, NON-CTRL, BUR
19	1017486	PANEL, RIGHT, REAR, BURGUNDY

AR-7T Electrical Assembly, 208V 1Ø

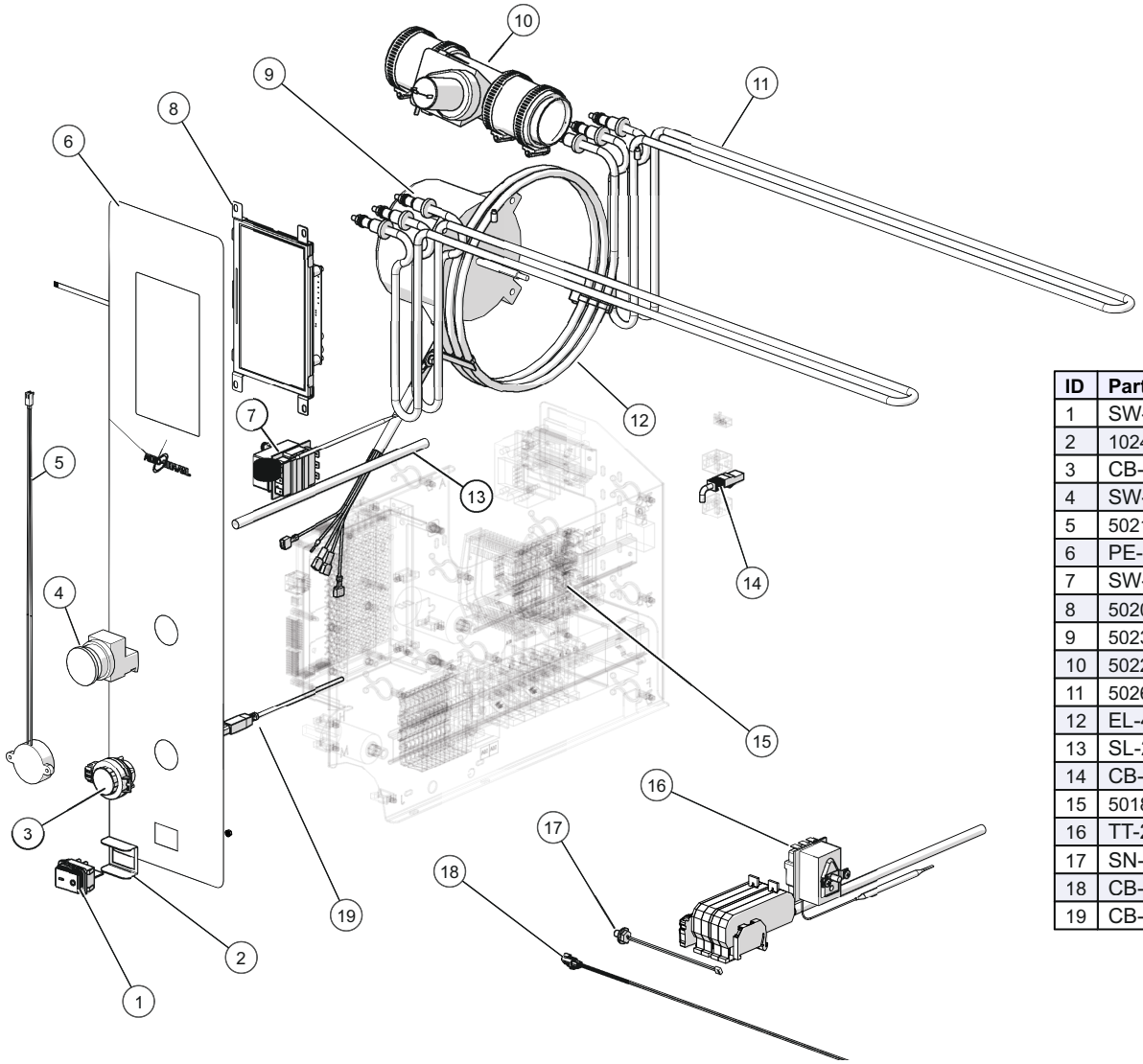

ID	Part No.	Description
1	SW-36714	SWITCH,ROCKER,20A@120V,
2	1024524	GUARD, SWITCH, AR7
3	CB-35746	CONNECTOR, USB, PANEL MOUNT
4	SW-37276	SWITCH, JOG
5	5021852	BEEPER EXTENSION ASSEMBLY
6	PE-37130	OVERLAY, AR-7 TOUCH CONTROL
7	SW-34454	SWITCH, THERMAL CUT-OUT, 275C
8	5020277	LCD,TOUCH,ASSB,AR-7T
9	5023743	MOTOR ASSY,CONVECTION
10	5022478	AR-7T, AIR INTAKE ASSEMBLY
11	5026055	ELEMENT ASSEMBLY, 208V
12	EL-46578	ELEMENT, CENTER, 3140W, 208V
13	SL-28021	SLEEVE, PROTECTIVE, 11" LONG
14	CB-35778	CAN/ETHERNET CABLE,1.5',SRJ45
15	5018910	ELECTRICAL ASSEMBLY,208-240V,
16	TT-29684	THERMAL CUT-OUT, MANUAL RESET
17	SN-46268	SENSOR, J-TYPE THERMISTOR
18	CB-47340	CABLE HARNESS,THERMISTOR, 110"
19	CB-35769	USB, CABLE,3' STANDARD

AR-7T Electrical Assembly, 208V 3Ø

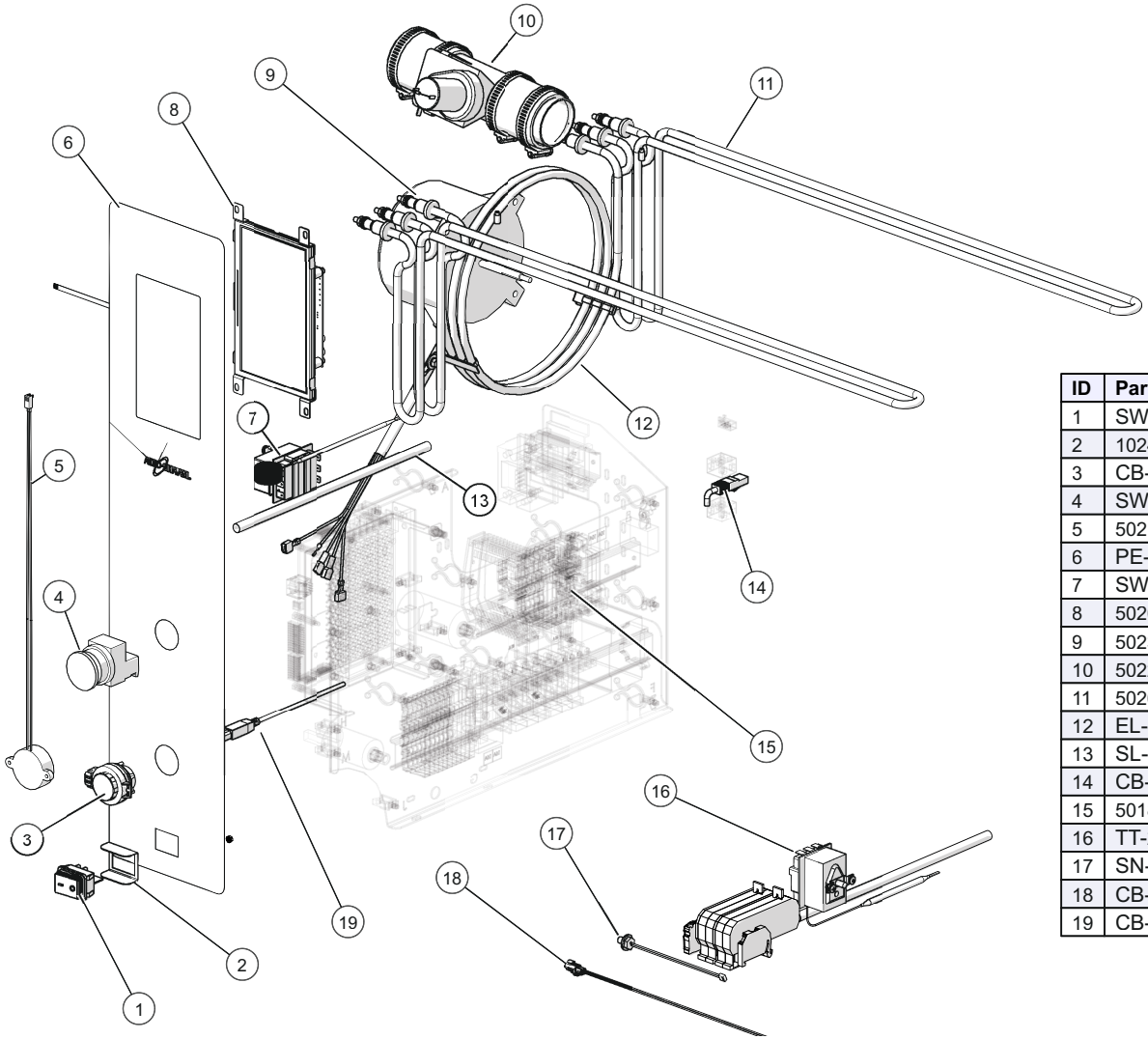

ID	Part No.	Description
1	SW-36714	SWITCH,ROCKER,20A@120V,
2	1024524	GUARD, SWITCH, AR7
3	CB-35746	CONNECTOR, USB, PANEL MOUNT
4	SW-37276	SWITCH, JOG
5	5021852	BEEPER EXTENSION ASSEMBLY
6	PE-37130	OVERLAY, AR-7 TOUCH CONTROL
7	SW-34454	SWITCH, THERMAL CUT-OUT, 275C
8	5020277	LCD,TOUCH,ASSB,AR-7T
9	5023743	MOTOR ASSY,CONVECTION
10	5022478	AR-7T, AIR INTAKE ASSEMBLY
11	5026055	ELEMENT ASSEMBLY, 208V
12	EL-46578	ELEMENT, CENTER, 3140W, 208V
13	SL-28021	SLEEVE, PROTECTIVE, 11" LONG
14	CB-35778	CAN/ETHERNET CABLE,1.5',SRJ45
15	5018907	ELEC ASSEMBLY,208-240V,3PH
16	TT-29684	THERMAL CUT-OUT, MANUAL RESET
17	SN-46268	SENSOR, J-TYPE THERMISTOR
18	CB-47340	CABLE HARNESS,THERMISTOR, 110"
19	CB-35769	USB, CABLE,3' STANDARD

AR-7T Electrical Assembly, 240V 1Ø

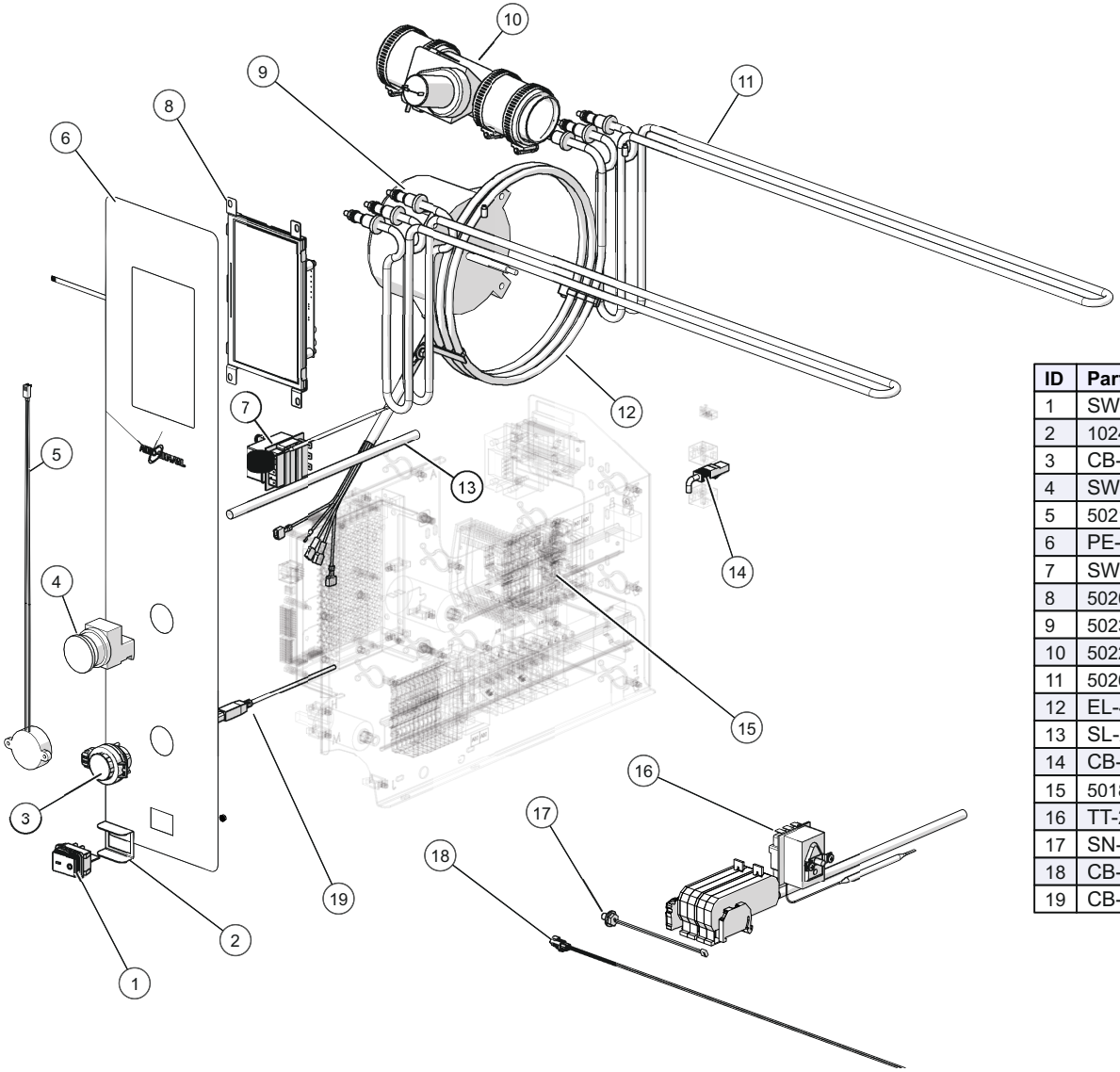

ID	Part No.	Description
1	SW-36714	SWITCH,ROCKER,20A@120V,
2	1024524	GUARD, SWITCH, AR7
3	CB-35746	CONNECTOR, USB, PANEL MOUNT
4	SW-37276	SWITCH, JOG
5	5021852	BEEPER EXTENSION ASSEMBLY
6	PE-37130	OVERLAY, AR-7 TOUCH CONTROL
7	SW-34454	SWITCH, THERMAL CUT-OUT, 275C
8	5020277	LCD,TOUCH,ASSB,AR-7T
9	5023743	MOTOR ASSY,CONVECTION
10	5022478	AR-7T, AIR INTAKE ASSEMBLY
11	5026057	ELEMENT ASSEMBLY, 240V
12	EL-46578	ELEMENT, CENTER, 3140W, 208V
13	SL-28021	SLEEVE, PROTECTIVE, 11" LONG
14	CB-35778	CAN/ETHERNET CABLE,1.5',SRJ45
15	5018910	ELECTRICAL ASSEMBLY,208-240V,
16	TT-29684	THERMAL CUT-OUT, MANUAL RESET
17	SN-46268	SENSOR, J-TYPE THERMISTOR
18	CB-47340	CABLE HARNESS,THERMISTOR, 110"
19	CB-35769	USB, CABLE,3' STANDARD

AR-7T Electrical Assembly, 240V 3Ø

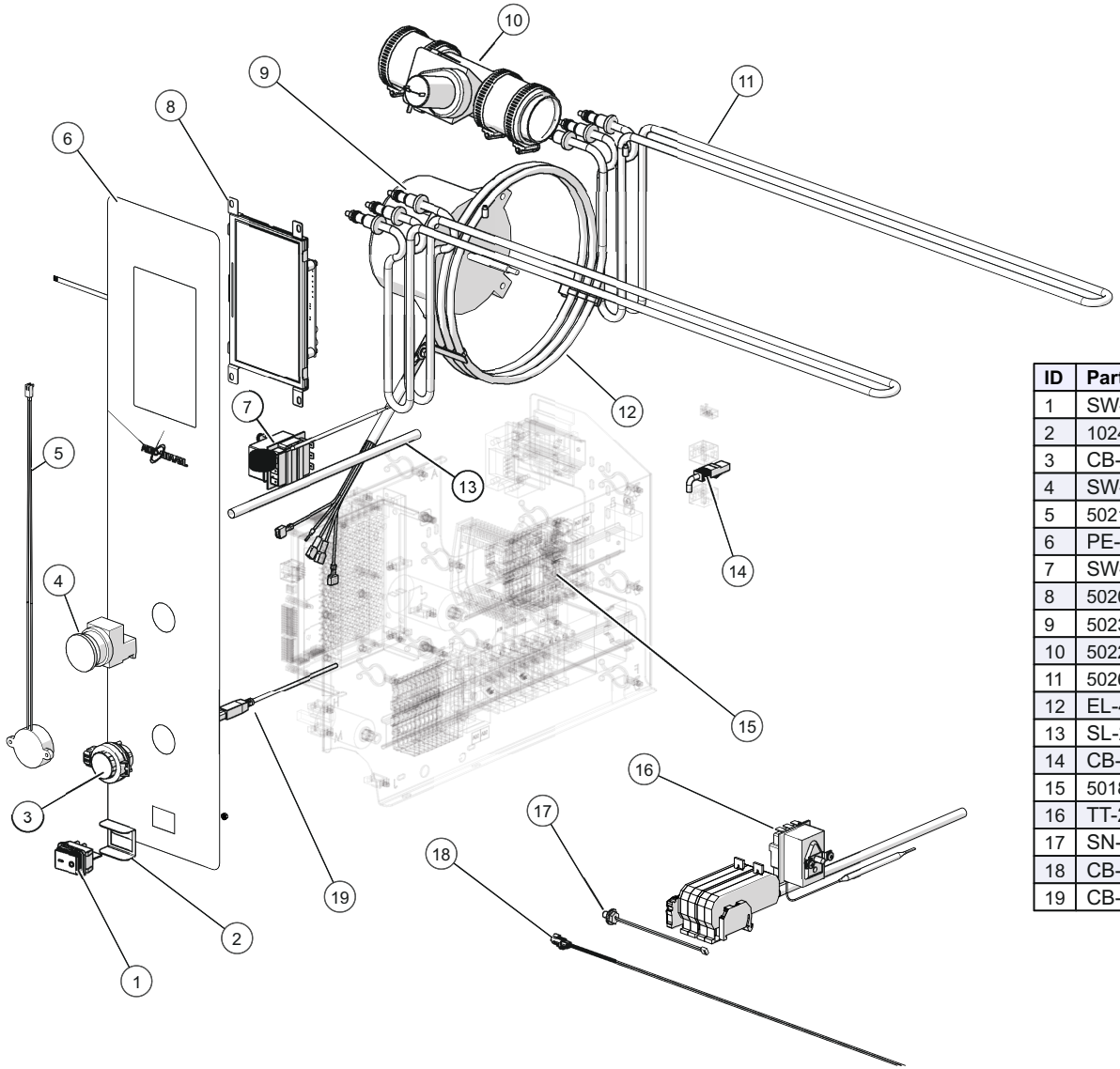

ID	Part No.	Description
1	SW-36714	SWITCH,ROCKER,20A@120V,
2	1024524	GUARD, SWITCH, AR7
3	CB-35746	CONNECTOR, USB, PANEL MOUNT
4	SW-37276	SWITCH, JOG
5	5021852	BEEPER EXTENSION ASSEMBLY
6	PE-37130	OVERLAY, AR-7 TOUCH CONTROL
7	SW-34454	SWITCH, THERMAL CUT-OUT, 275C
8	5020277	LCD,TOUCH,ASSB,AR-7T
9	5023743	MOTOR ASSY,CONVECTION
10	5022478	AR-7T, AIR INTAKE ASSEMBLY
11	5026057	ELEMENT ASSEMBLY, 240V
12	EL-46578	ELEMENT, CENTER, 3140W, 208V
13	SL-28021	SLEEVE, PROTECTIVE, 11" LONG
14	CB-35778	CAN/ETHERNET CABLE,1.5',SRJ45
15	5018907	ELEC ASSEMBLY,240V,3PH
16	TT-29684	THERMAL CUT-OUT, MANUAL RESET
17	SN-46268	SENSOR, J-TYPE THERMISTOR
18	CB-47340	CABLE HARNESS,THERMISTOR, 110"
19	CB-35769	USB, CABLE,3' STANDARD

AR-7T Electrical Assembly, 380V–415V 3Ø

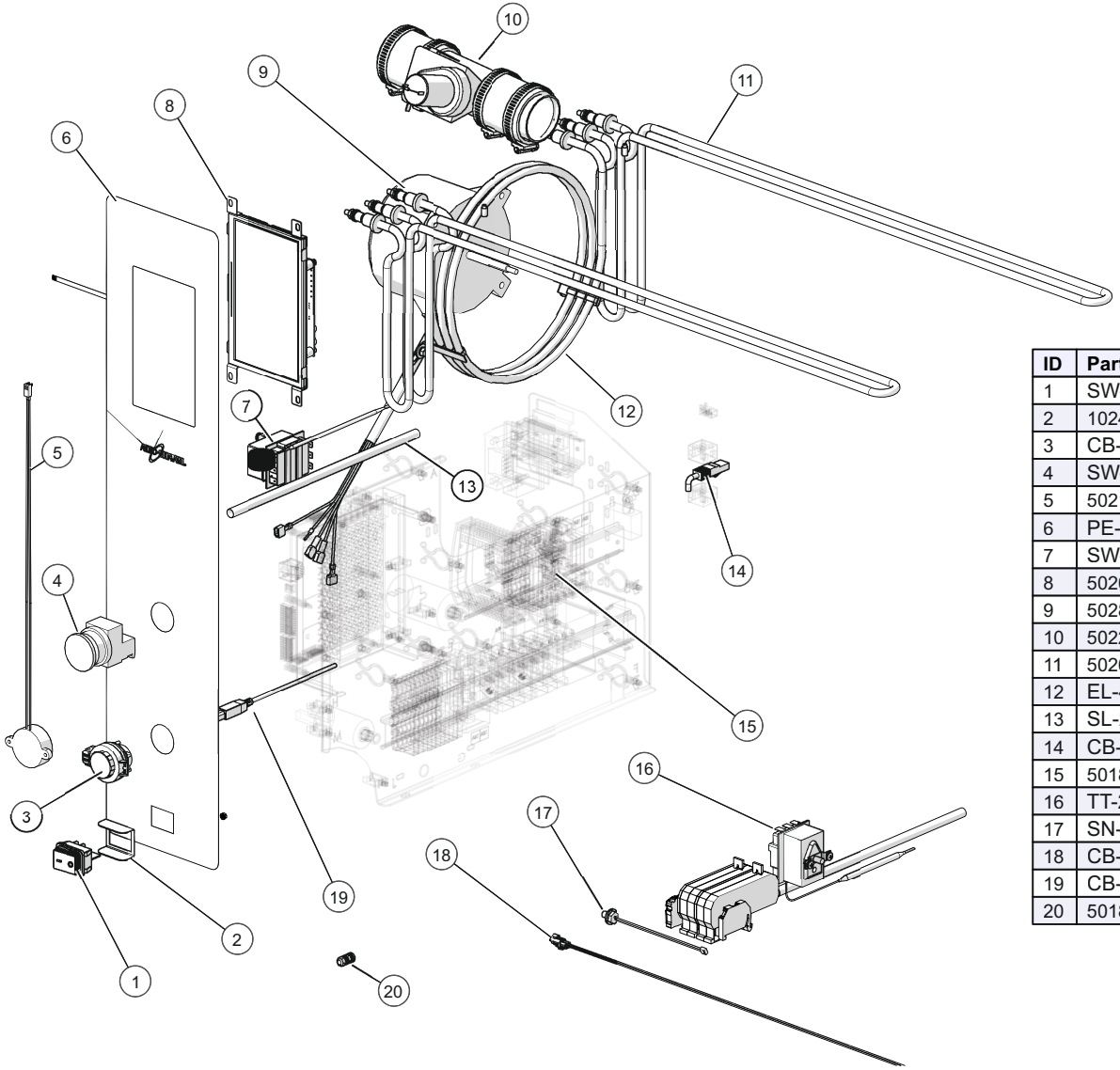

ID	Part No.	Description
1	SW-36714	SWITCH,ROCKER,20A@120V,
2	1024524	GUARD, SWITCH, AR7
3	CB-35746	CONNECTOR, USB, PANEL MOUNT
4	SW-37276	SWITCH, JOG
5	5021852	BEEPER EXTENSION ASSEMBLY
6	PE-37130	OVERLAY, AR-7 TOUCH CONTROL
7	SW-34454	SWITCH, THERMAL CUT-OUT, 275C
8	5020277	LCD,TOUCH,ASSB,AR-7T
9	5028627	MOTOR ASSY,CONVECTION
10	5022478	AR-7T, AIR INTAKE ASSEMBLY
11	5026057	ELEMENT ASSEMBLY, 240V
12	EL-46578	ELEMENT, CENTER, 3140W, 208V
13	SL-28021	SLEEVE, PROTECTIVE, 11" LONG
14	CB-35778	CAN/ETHERNET CABLE,1.5',SRJ45
15	5018911	ELEC ASSEMBLY,380-415V,3PH
16	TT-29684	THERMAL CUT-OUT, MANUAL RESET
17	SN-46268	SENSOR, J-TYPE THERMISTOR
18	CB-47340	CABLE HARNESS,THERMISTOR, 110"
19	CB-35769	USB, CABLE,3' STANDARD
20	5018898	GROUND STUD ASSY

AR-7HT Electrical Package, 120V, 208V–240V 1Ø

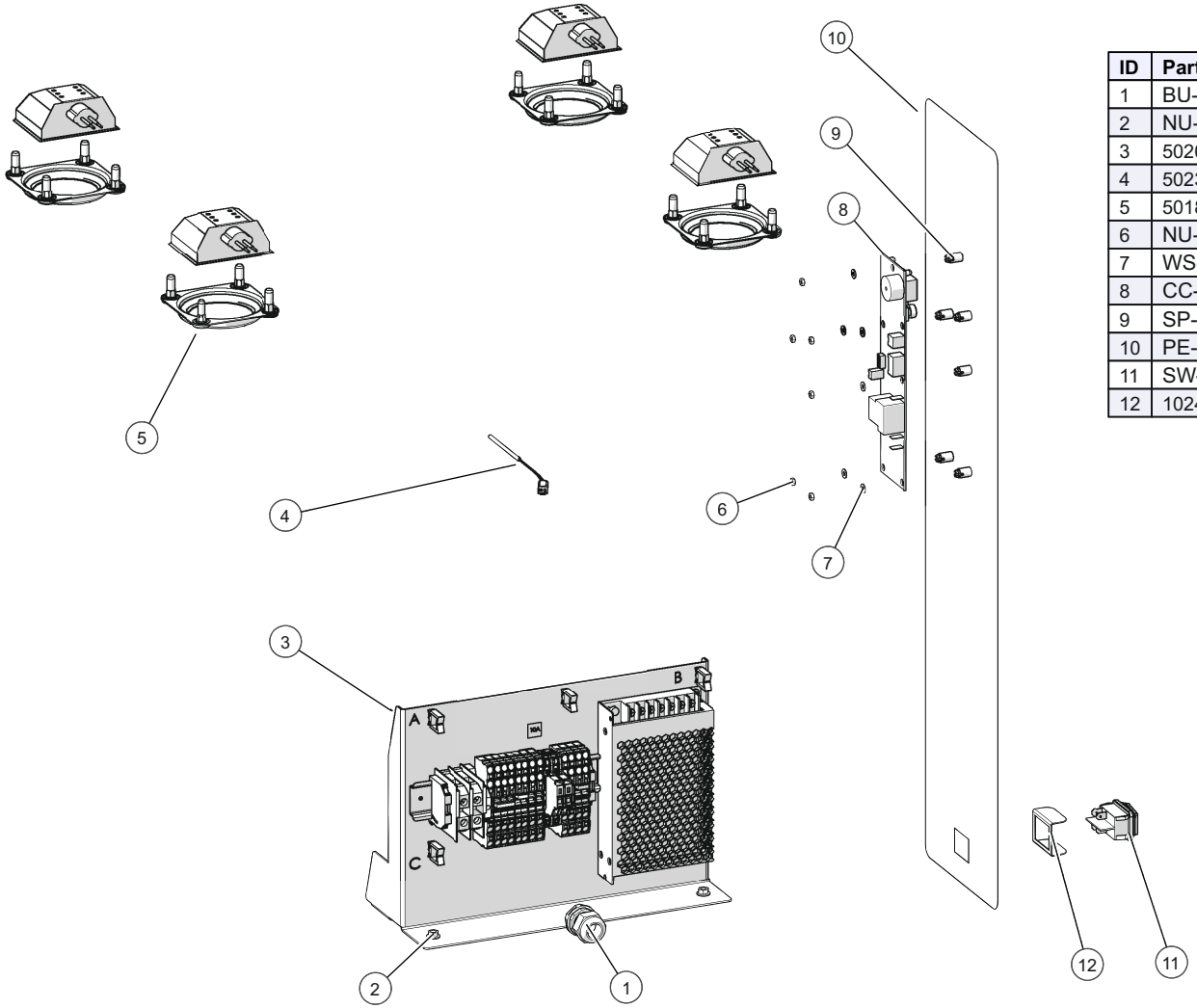

ID	Part No.	Description
1	BU-3964	BUSHING,STRAIGHT,STRAIN RELIEF
2	NU-38212	NUT,M5-0.8 HEX FLG-SERR CL8 SS
3	5020678	CHASSIS, ELEC, ALL VOLTAGES
4	5023745	SENSOR ASSY,1K OHM
5	5018971	LIGHT ASSEMBLY
6	NU-22285	NUT, M3-0.5 HEX NUT
7	WS-23148	WASHER, 6-32, FLAT, NYL
8	CC-36403	ELAN CONTROL,VERT. OF CC-34970
9	SP-29392	SPACER, SNAP-IN, 7/16”
10	PE-38176	OVERLAY, CONTROL
11	SW-36714	SWITCH,ROCKER,20A@120V,
12	1024524	GUARD, SWITCH, AR7

AR-7HT Electrical Package, 230V International

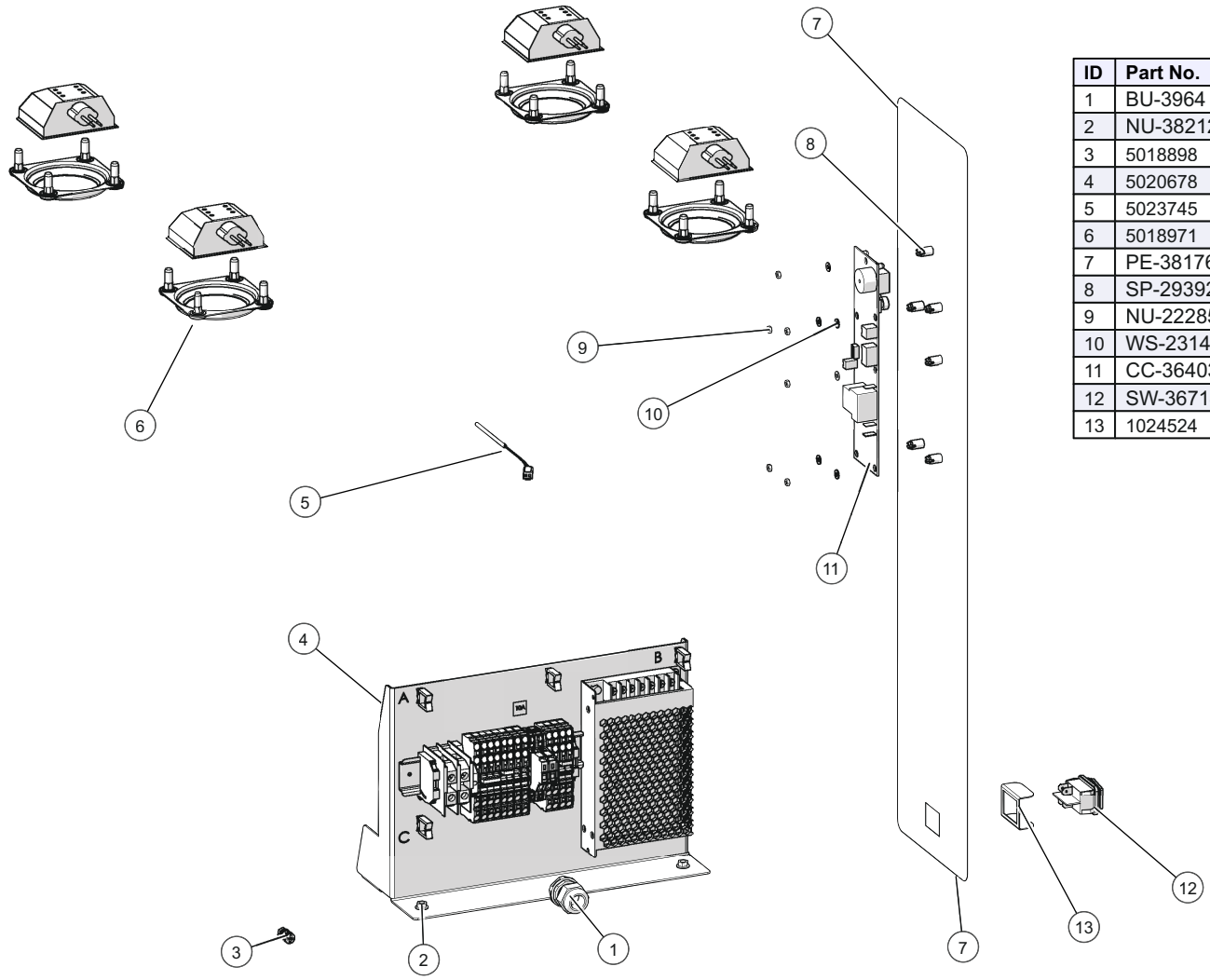

ID	Part No.	Description
1	BU-3964	BUSHING,STRAIGHT,STRAIN RELIEF
2	NU-38212	NUT,M5-0.8 HEX FLG-SERR CL8 SS
3	5018898	GROUND STUD ASSY
4	5020678	CHASSIS, ELEC, ALL VOLTAGES
5	5023745	SENSOR ASSY,1K OHM
6	5018971	LIGHT ASSEMBLY
7	PE-38176	OVERLAY, CONTROL
8	SP-29392	SPACER, SNAP-IN, 7/16”
9	NU-22285	NUT, M3-0.5 HEX NUT
10	WS-23148	WASHER, 6-32, FLAT, NYL
11	CC-36403	ELAN CONTROL,VERT. OF CC-34970
12	SW-36714	SWITCH,ROCKER,20A@120V,
13	1024524	GUARD, SWITCH, AR7

AR-7T Electrical Chassis, 208-240V 1Ø

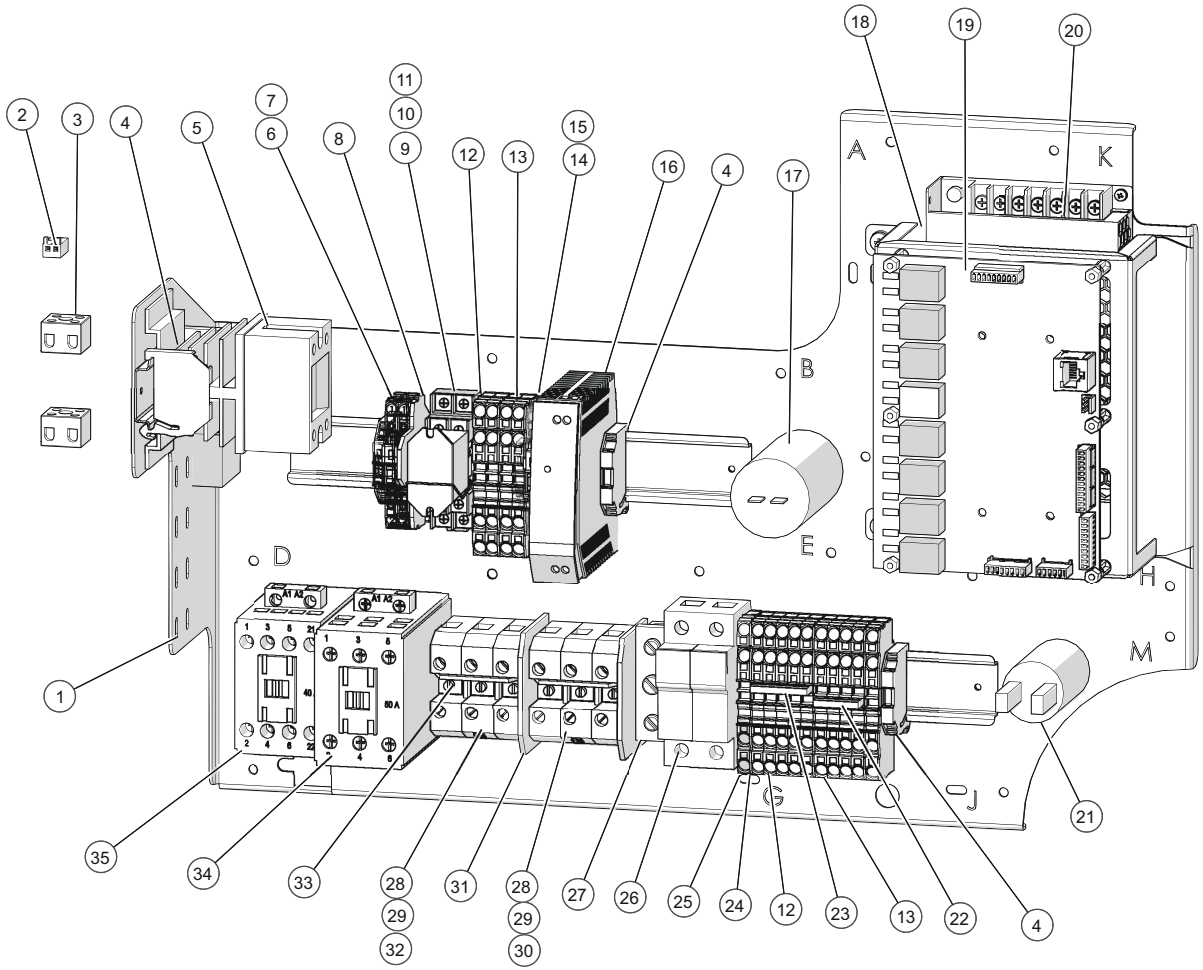

ID	Part No.	Description
1	5018328	PLATE, ELECTRICAL CHASSIS ASSY
2	CR-36574	MOLEX HOUSING
3	BK-33546	BLOCK, 2 TERMINAL, PORCELAIN
4	TM-39606	TERMINAL, SCREWLESS END
5	RL-39490	RELAY, SOLID STATE, 230V, 50A
6	TM-39577	TERMINAL, FUSE HOLDER,
7	FU-34955	FUSE, GLASS ENVELOPE
8	TM-39578	TERMINAL, END PLATE
9	RL-34634	UNIVERSAL MOUNTING SOCKET
10	RL-33930	RELAY,12VDC,15A,8 PINS
11	RL-37266	RELAY HOLD DOWN SPRING CLIP
12	TM-39574	TERMINAL, 6mm, ORANGE, SPRING
13	TM-39575	TERMINAL, 6mm, BLUE, SPRING
14	TM-39577	TERMINAL, FUSE HOLDER,
15	FU-33184	5X20MM, SLOW BLO, 2 AMP, 250V
16	BA-37095	POWER SUPPLY, 30W
17	CU-29666	CAPACITOR, 16uF
18	5023163	ASSEMBLY,CONTROL PANEL SUPPORT
19	CC-39484	ASSY,CONTROL BOARD & FIRMWARE
20	BA-38729	POWER SUPPLY,12VDC,12.5A,150W
21	MO-34636_CAP	CAPACITOR FOR MO-34636
22	TM-39583	JUMPER, 4 POLE
23	TM-39582	JUMPER, 5 POLE
24	TM-39576	TERMINAL, END SECTION, SPRING
25	TM-39579	TERMINAL,GROUND, 6mm, SPRING
26	FU-34772	FUSE, 15 AMP
27	TM-3782	TERMINAL, GROUND, 35mm
28	TM-3780	TERMINALS,*CT,SER.,35MM
29	TM-3788	TERMINALS, MARK, L
30	TM-3791	TERMINALS, MARK, 2
31	TM-3786	TERMINAL, CT, 35mm WALL, PART
32	TM-3790	TERMINALS, MARK, 1
33	TM-33064	JUMPER BAR, 3 POLE, 33mm SQ
34	CN-3731	CONTACTOR, 50 AMP
35	CN-3654	CONTACTOR, 40 AMP

5019091 Wire Assembly, Pass-Thru (not shown)

AR-7T Electrical Chassis, 208-240V 3Ø

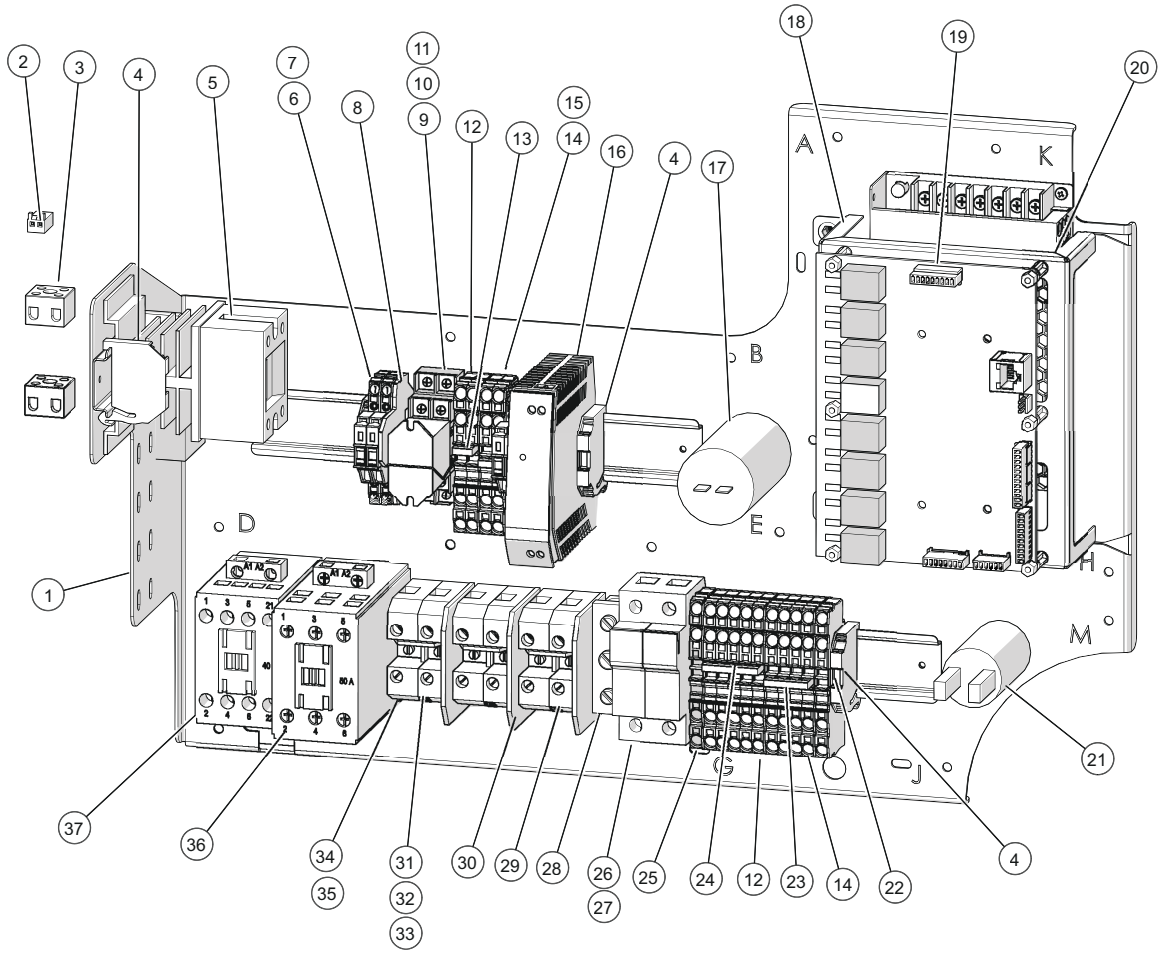

ID	Part No.	Description
1	5018328	PLATE, ELECTRICAL CHASSIS ASSY
2	CR-36574	MOLEX HOUSING
3	BK-33546	BLOCK, 2 TERMINAL, PORCELAIN
4	TM-39606	TERMINAL, SCREWLESS END
5	RL-39490	RELAY, SOLID STATE, 230V, 50A
6	TM-39577	TERMINAL, FUSE HOLDER,
7	FU-34955	FUSE, GLASS ENVELOPE
8	TM-39578	TERMINAL, END PLATE
9	RL-34634	UNIVERSAL MOUNTING SOCKET
10	RL-33930	RELAY,12VDC,15A,8 PINS
11	RL-37266	SPRING, HOLD DOWN,
12	TM-39574	TERMINAL, 6mm, ORANGE, SPRING
13	TM-39585	JUMPER, 2 POLE
14	TM-39575	TERMINAL, 6mm, BLUE, SPRING
15	FU-33184	5X20MM, SLOW BLO, 2 AMP, 250V
16	BA-37095	POWER SUPPLY, 30W
17	CU-29666	CAPACITOR, 16uF
18	5023163	ASSEMBLY,CONTROL PANEL SUPPORT
19	CC-39484	ASSY,CONTROL BOARD & FIRMWARE
20	BA-38729	POWER SUPPLY,12VDC,12.5A,150W
21	MO-34636_CAP	CAPACITOR FOR MO-34636
22	TM-39576	TERMINAL, END SECTION, SPRING
23	TM-39583	JUMPER, 4 POLE
24	TM-39582	JUMPER, 5 POLE
25	TM-39579	TERMINAL,GROUND, 6mm, SPRING
26	FU-34771	FUSE HOLDER, 2 BANK
27	FU-34772	FUSE, 15 AMP
28	TM-3782	TERMINAL, GROUND, 35mm
29	TM-3792	TERMINALS, MARK, 3
30	TM-3786	TERMINAL, CT, 35mm WALL, PART
31	TM-3788	TERMINALS, MARK, L
32	TM-3790	TERMINALS, MARK, 1
33	TM-3791	TERMINALS, MARK, 2
34	TM-3780	TERMINALS,*CT,SER.,35MM
35	TM-33837	JUMPER STRIP
36	CN-3731	CONTACTOR, 50 AMP
37	CN-3654	CONTACTOR, 40 AMP

5019091 Wire Assembly, Pass-Thru (not shown)

AR-7T Electrical Chassis, 380-415V 3Ø

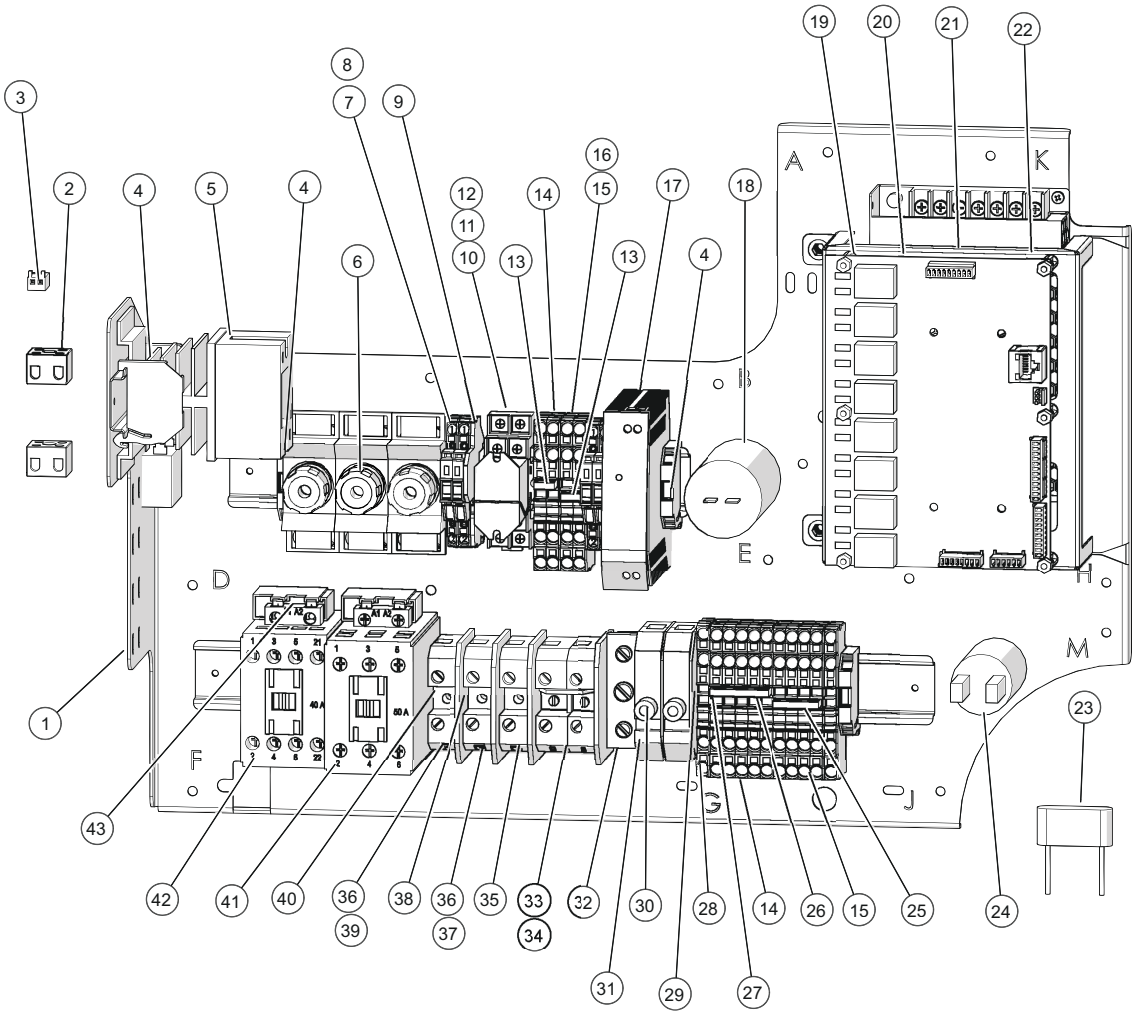

ID	Part No.	Description
1	5018328	PLATE, ELECTRICAL CHASSIS ASSY
2	BK-33546	BLOCK, 2 TERMINAL, PORCELAIN
3	CR-36574	MOLEX HOUSING
4	TM-39606	TERMINAL, SCREWLESS END
5	RL-39490	RELAY, SOLID STATE, 230V, 50A
6	FU-33450	FUSE,DO2 NEOZED 20A, BLUE
7	TM-39577	TERMINAL, FUSE HOLDER,
8	FU-34955	FUSE, GLASS ENVELOPE
9	TM-39578	TERMINAL, END PLATE
10	RL-34634	UNIVERSAL MOUNTING SOCKET
11	RL-37266	SPRING, HOLD DOWN,
12	RL-33930	RELAY,12VDC,15A,8 PINS
13	TM-39585	JUMPER, 2 POLE
14	TM-39574	TERMINAL, 6mm, ORANGE, SPRING
15	TM-39575	TERMINAL, 6mm, BLUE, SPRING
16	FU-33184	5X20MM, SLOW BLO, 2 AMP, 250V
17	BA-37095	POWER SUPPLY, 30W
18	CU-29666	CAPACITOR, 16uF
19	BA-39483	BOARD,CONTROL,CONSOLIDATED
20	CC-39484	ASSY,CONTROL BOARD & FIRMWARE
21	BA-38729	POWER SUPPLY,12VDC,12.5A,150W
22	5023163	ASSEMBLY,CONTROL PANEL SUPPORT
23	FI-33989	FILTER,*CT,WW UNITS,RC-MODULE
24	MO-34636_CAP	CAPACITOR FOR MO-34636
25	TM-39583	JUMPER, 4 POLE
26	TM-39582	JUMPER, 5 POLE
27	TM-39576	TERMINAL, END SECTION, SPRING
28	TM-39579	TERMINAL,GROUND, 6mm, SPRING
29	FU-34749	FUSE,HOLDER COVER
30	FU-34921	FUSE, 15 AMP, 250V, 5mm X 20mm
31	FU-33451	FUSE, TERMINAL, 6.3AMP
32	TM-3782	TERMINAL, GROUND, 35mm
33	TM-33479	TERMINALS, MARK, N
34	TM-33837	JUMPER STRIP
35	TM-3792	TERMINALS, MARK, 3
36	TM-3788	TERMINALS, MARK, L
37	TM-3791	TERMINALS, MARK, 2
38	TM-3786	TERMINAL, CT, 35mm WALL, PART
39	TM-3790	TERMINALS, MARK, 1
40	TM-3780	TERMINALS,*CT,SER.,35MM
41	CN-3731	CONTACTOR, 50 AMP
42	CN-3654	CONTACTOR, 40 AMP
43	FI-33990	EMI FILTER

5019091 Wire Assembly, Pass-Thru (not shown)

AR-7HT Electrical Chassis (all voltages)

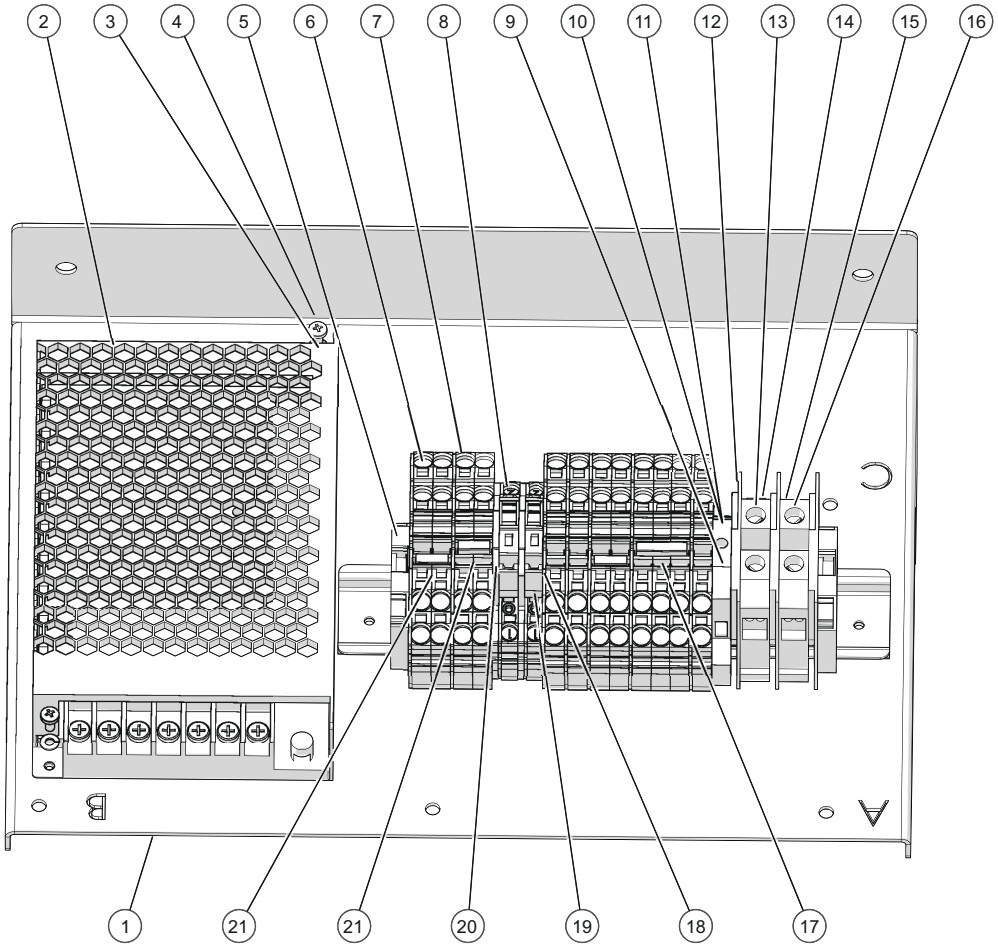

ID	Part No.	Description
1	1018778	PLATE, ELECTRICAL CHASSIS
2	BA-38729	POWER SUPPLY,12VDC,12.5A,150W
3	WS-22299	WASHER, SPLIT LOCK
4	SC-22266	M3X6, RD, PHIL, M/S CHEESE HD, S/S
5	TM-39606	TERMINAL, SCREWLESS END
6	TM-39575	TERMINAL, 6mm, BLUE, SPRING
7	TM-39574	TERMINAL, 6mm, ORANGE, SPRING
8	TM-39577	TERMINAL, FUSE HOLDER,
9	TM-3781	TERMINAL, GROUND
10	TM-3799	TERMINALS, MARK, E
11	TM-3789	TERMINALS, MARK, P
12	TM-3785	TERMINALS,*CT,WALL,PART.,16MM
13	TM-3791	TERMINALS, MARK, 2
14	TM-3779	TERMINAL BLOCK
15	TM-3788	TERMINALS, MARK, L
16	TM-3790	TERMINALS, MARK, 1
17	TM-39584	JUMPER, 3 POLE
18	TM-39576	TERMINAL, END SECTION, SPRING
19	FU-34955	FUSE, GLASS ENVELOPE
20	TM-39578	TERMINAL, END PLATE
21	TM-39585	JUMPER, 2 POLE

AR-7HT Power Cords

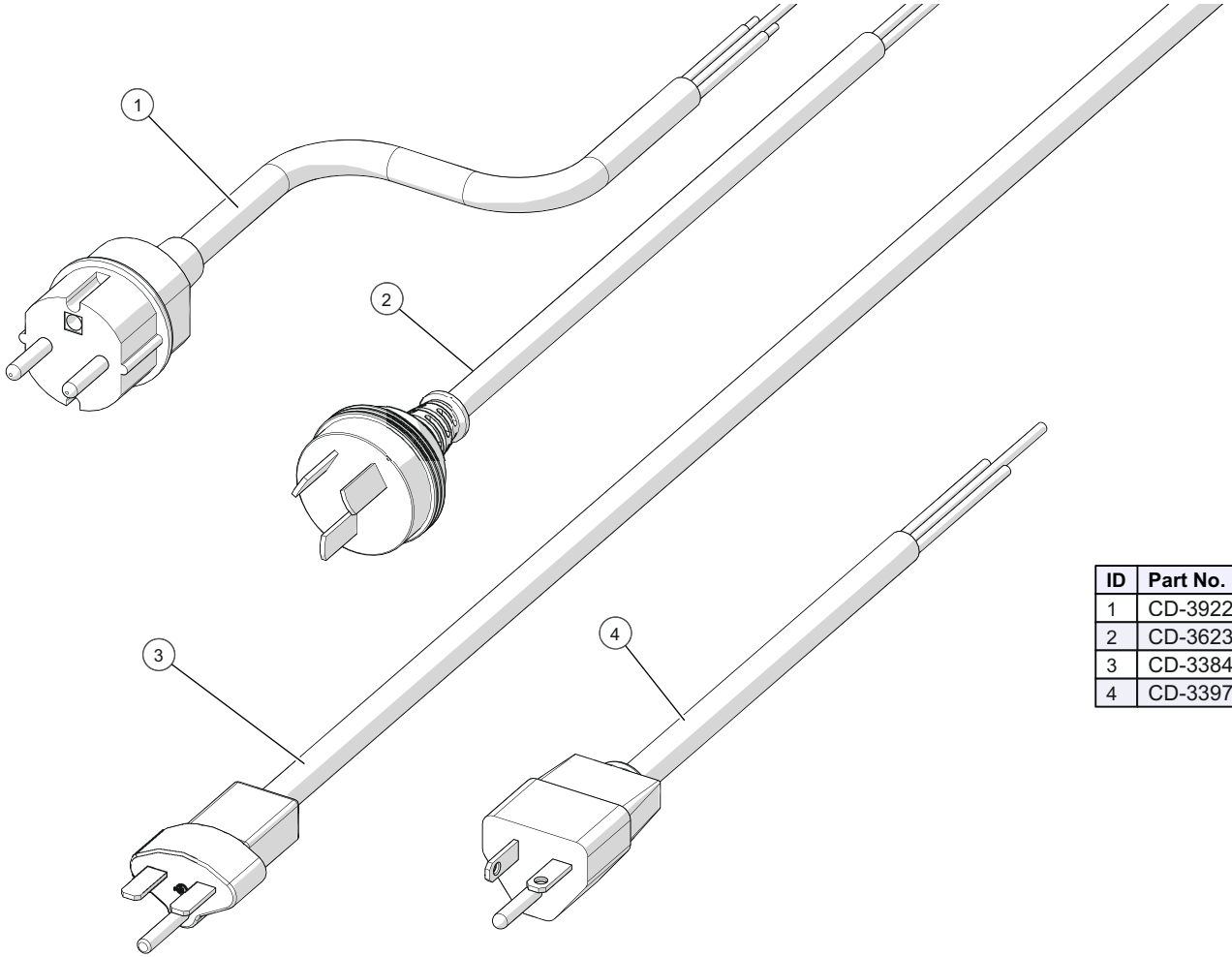

ID	Part No.	Description
1	CD-3922	CORDSET-16AWG, 3/C, INT'L HARM
2	CD-36231	CORDSET,16A-250V CH2-16P 2 POLE
3	CD-33840	CORDSET, 16/3 SJTO, 250V
4	CD-3397	CORDSET,12/3 SJO,20A-125V PLUG

AR-7T / AR-7HT Door Assembly, Curved, RH

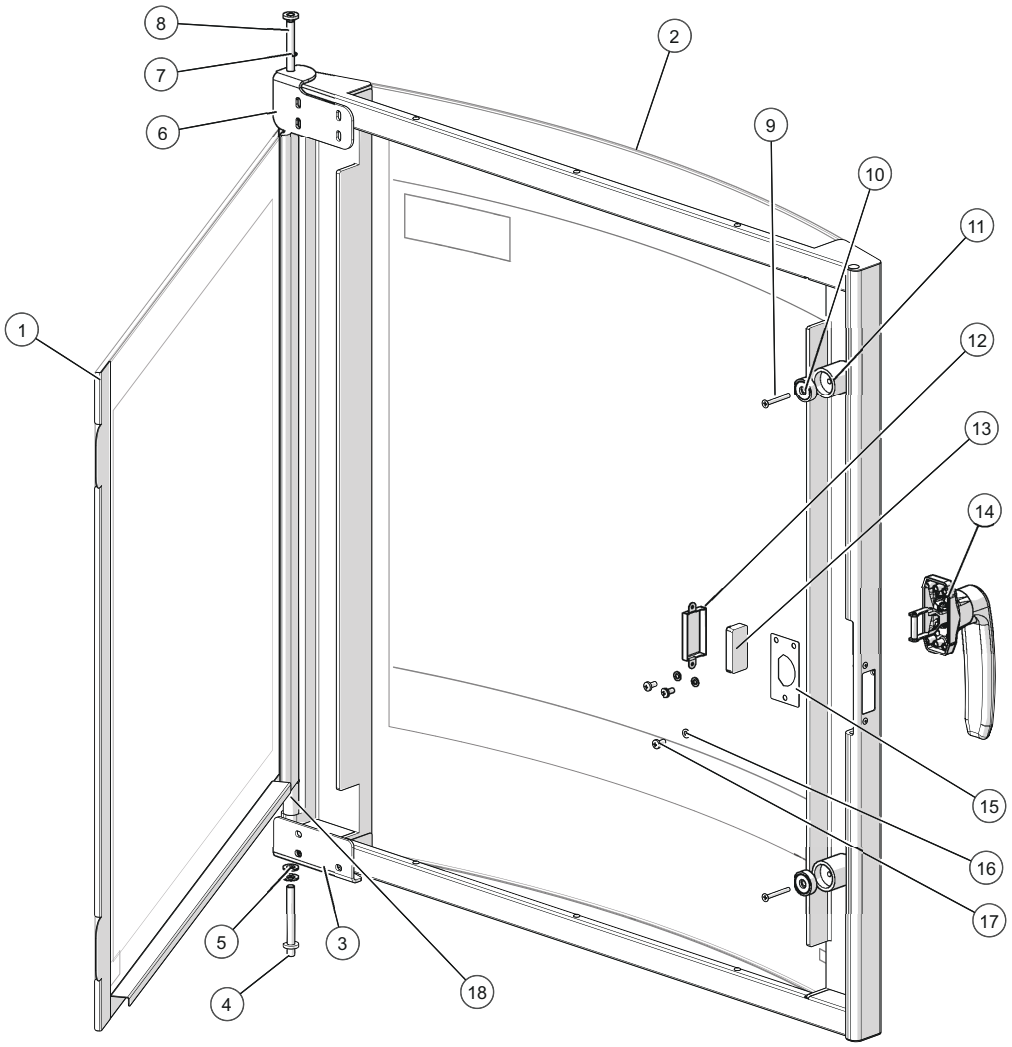

ID	Part No.	Description
1	5028937	DOOR ASSEMBLY, INNER, RH
2	5020965R	DOOR ASSEMBLY, OUTER,CURVED,RH
3	1022685	HINGE, DOOR, RH, BOTTOM
4	PI-26352	PIN, DOOR BOTTOM
5	WS-22298	WASHER, M8, 18-8
6	1030507	HINGE, UPPER, SLOTTED
7	CL-39138	CLIP, E, EXTERNAL, SIDE MOUNT
8	PI-26350	PIN, DOOR TOP
9	SC-38246	SCREW,M4x0.7X35MM FLAT
10	MA-38245	MAGNET,NEO, NICKEL PLATED
11	BM-38244	BUMPER,STAND-OFF,AR-7,DOOR
12	1027921	COVER, DOOR MAGNET
13	MA-25734	MAGNET, DOOR, AR-7E,BLACK
14	HD-39262	HANDLE, DOOR, PENDLUM
15	1027982	BRACKET,COVER,HANDLE,AR-7
16	WS-22301	WASHER, M5 SPLIT LOCK S/S 18-8
17	SC-22766	SCREW,M5x0.8X10MM PAN
18	SP-37313	SPACER, BOTTOM, INNER GLASS,

AR-7T / AR-7HT Door Assembly, Curved, LH

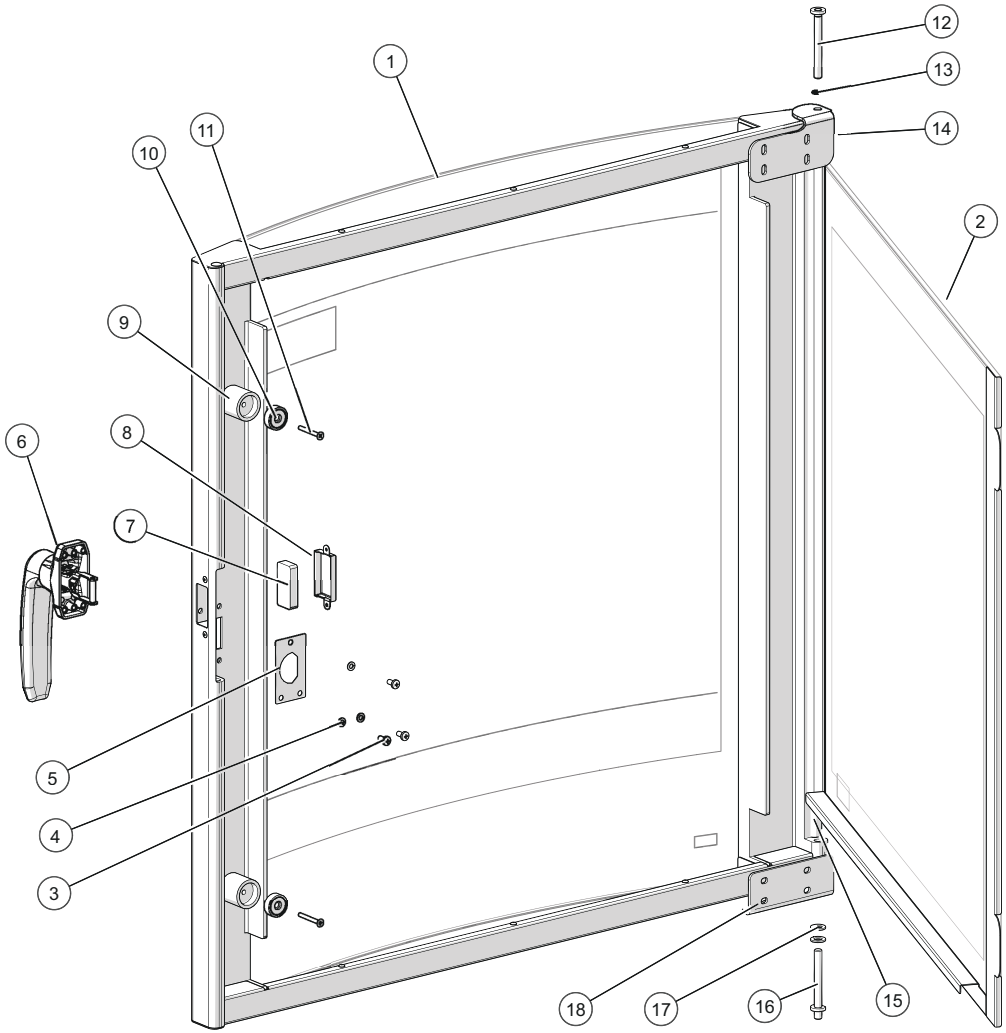

ID	Part No.	Description
1	5020972R	DOOR ASSEMBLY, OUTER,CURVED,LH
2	5028984	DOOR ASSEMBLY, INNER, LH
3	SC-22766	SCREW,M5x0.8X10MM PAN
4	WS-22301	WASHER, M5 SPLIT LOCK S/S 18-8
5	1027982	BRACKET,COVER,HANDLE,AR-7
6	HD-39326	HANDLE, DOOR, LEFT, AR-7
7	MA-25734	MAGNET, DOOR, AR-7E,BLACK
8	1027921	COVER, DOOR MAGNET
9	BM-38244	BUMPER,STAND-OFF,AR-7,DOOR
10	MA-38245	MAGNET,NEO, NICKEL PLATED
11	SC-38246	SCREW,M4x0.7X35MM FLAT
12	PI-26350	PIN, DOOR TOP
13	CL-39138	CLIP, E, EXTERNAL, SIDE MOUNT
14	1031274	HINGE, UPPER, SLOTTED
15	SP-37313	SPACER, BOTTOM, INNER GLASS,
16	PI-26352	PIN, DOOR BOTTOM
17	WS-22298	WASHER, M8, 18-8
18	1023661	HINGE, DOOR, AR-7/AR-7T

AR-7T / AR-7HT Door Assembly, Flat, RH

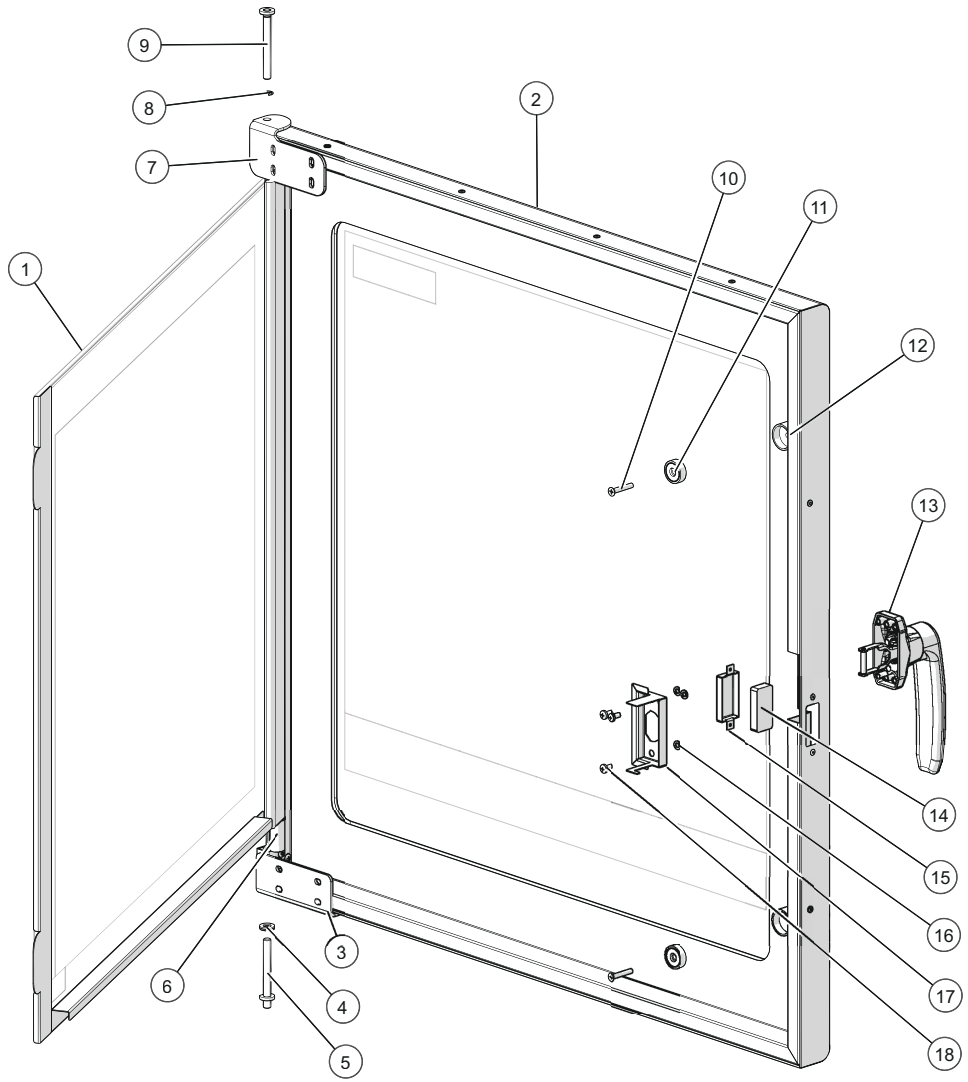

ID	Part No.	Description
1	5028937	DOOR ASSEMBLY, INNER, RH
2	5028938	DOOR ASSEMBLY, OUTER, FLAT, RH
3	1022685	HINGE, DOOR, RH, BOTTOM
4	WS-22298	WASHER, M8, 18-8
5	PI-26352	PIN, DOOR BOTTOM
6	SP-37313	SPACER, BOTTOM, INNER GLASS,
7	1030507	HINGE, UPPER, SLOTTED
8	CL-39138	CLIP, E, EXTERNAL, SIDE MOUNT
9	PI-26350	PIN, DOOR TOP
10	SC-22853	SCREW,M5x0.8X30MM FLAT
11	MA-38245	MAGNET,NEO, NICKEL PLATED
12	BM-46449	BUMPER,STAND-OFF,AR-7,DOOR
13	HD-39262	HANDLE, DOOR, PENDLUM
14	MA-25734	MAGNET, DOOR, AR-7E,BLACK
15	1032804	TAB, MAGNET, DOOR
16	WS-22301	WASHER, M5 SPLIT LOCK S/S 18-8
17	1031010	COVER, HANDLE, FLAT DOOR
18	SC-22766	SCREW,M5x0.8X10MM PAN

AR-7T / AR-7HT Door Assembly, Flat, LH

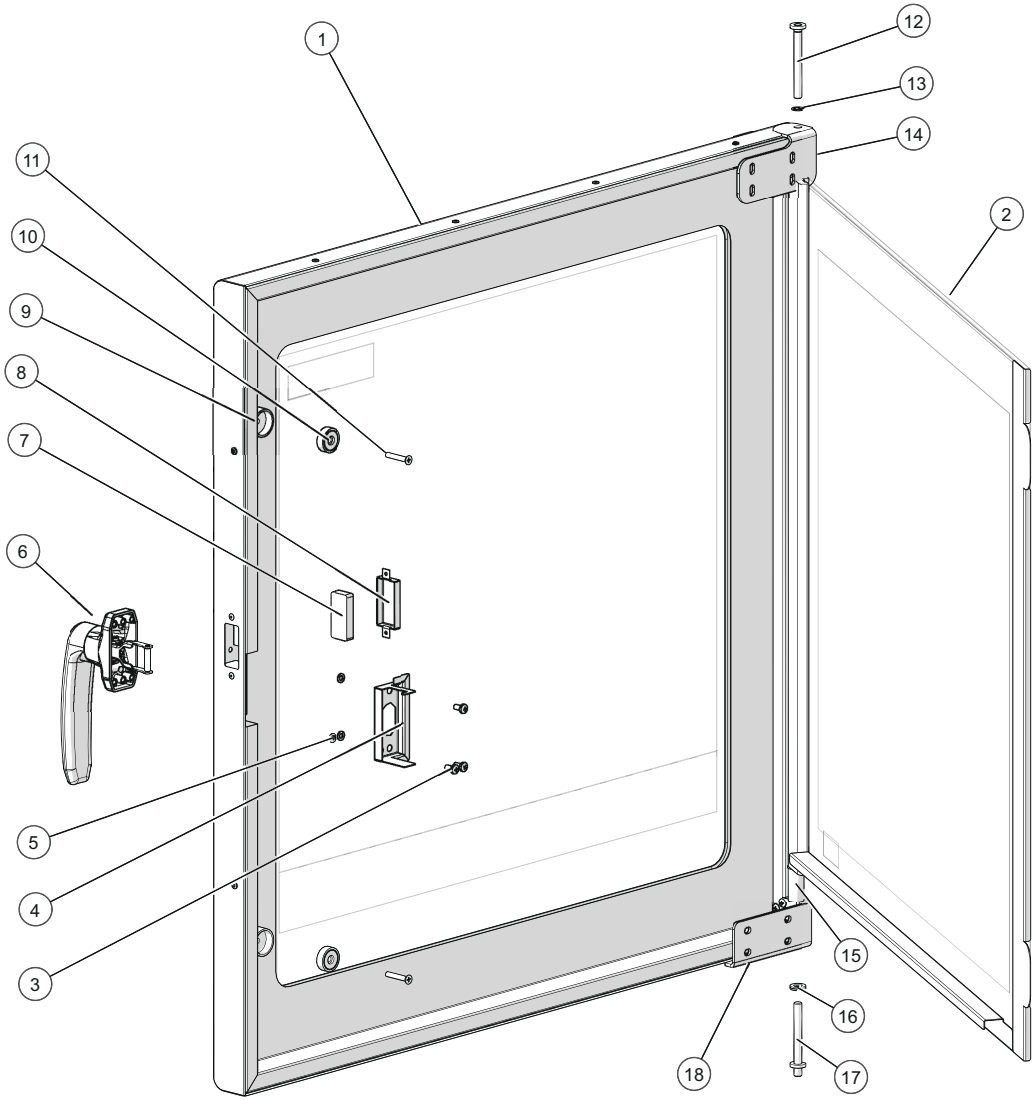

ID	Part No.	Description
1	5028983	DOOR ASSEMBLY, OUTER, FLAT, LH
2	5028984	DOOR ASSEMBLY, INNER, LH
3	SC-22766	SCREW,M5x0.8X10MM PAN
4	1031010	COVER, HANDLE, FLAT DOOR
5	WS-22301	WASHER, M5 SPLIT LOCK S/S 18-8
6	HD-39326	HANDLE, DOOR, LEFT, AR-7
7	MA-25734	MAGNET, DOOR, AR-7E,BLACK
8	1032804	TAB, MAGNET, DOOR
9	BM-46449	BUMPER,STAND-OFF,AR-7,DOOR
10	MA-38245	MAGNET,NEO, NICKEL PLATED
11	SC-22853	SCREW,M5x0.8X30MM FLAT
12	PI-26350	PIN, DOOR TOP
13	CL-39138	CLIP, E, EXTERNAL, SIDE MOUNT
14	1031274	HINGE, UPPER, SLOTTED
15	SP-37313	SPACER, BOTTOM, INNER GLASS,
16	WS-22298	WASHER, M8, 18-8
17	PI-26352	PIN, DOOR BOTTOM
18	1023661	HINGE, DOOR, AR-7/AR-7T

AR-7T / AR-7HT Door Assembly, Flat Back

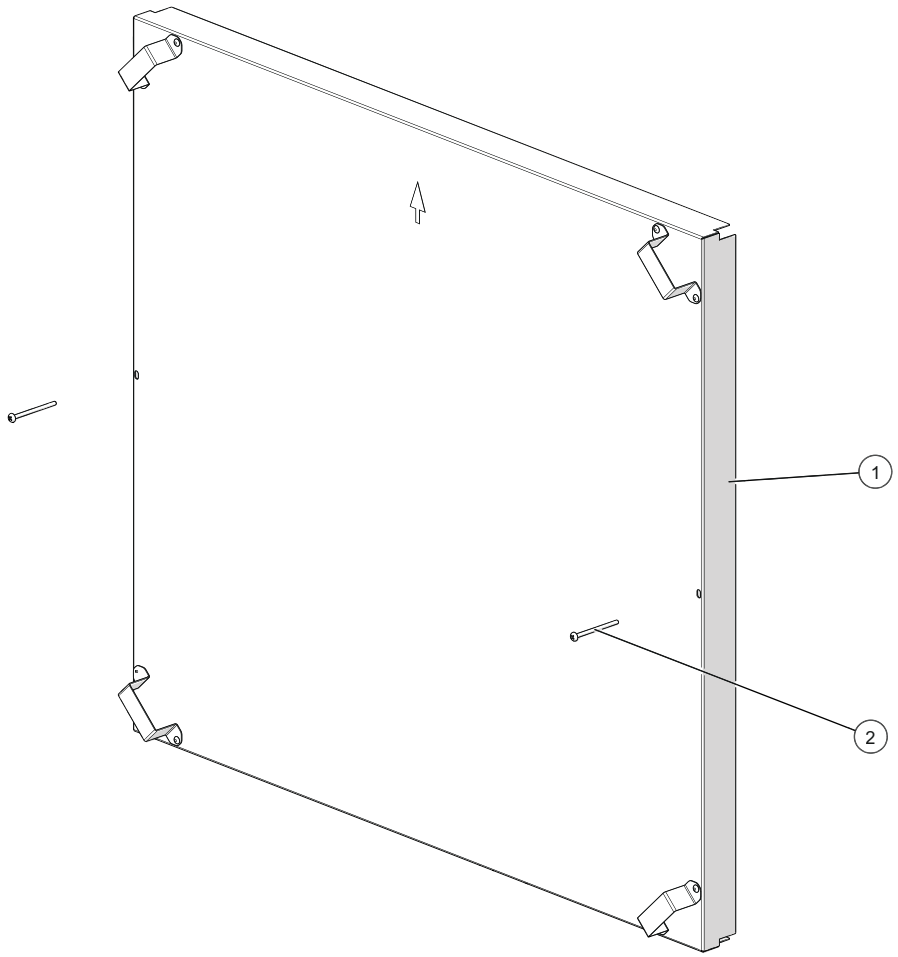

ID	Part No.	Description
1	5018308	ASSEMBLY, FLAT BACK
2	SC-23154	8-32 X 2 PHILLIPS PAN HEAD 18-8 S.S.

AR-7T Plumbing/Wash Assembly

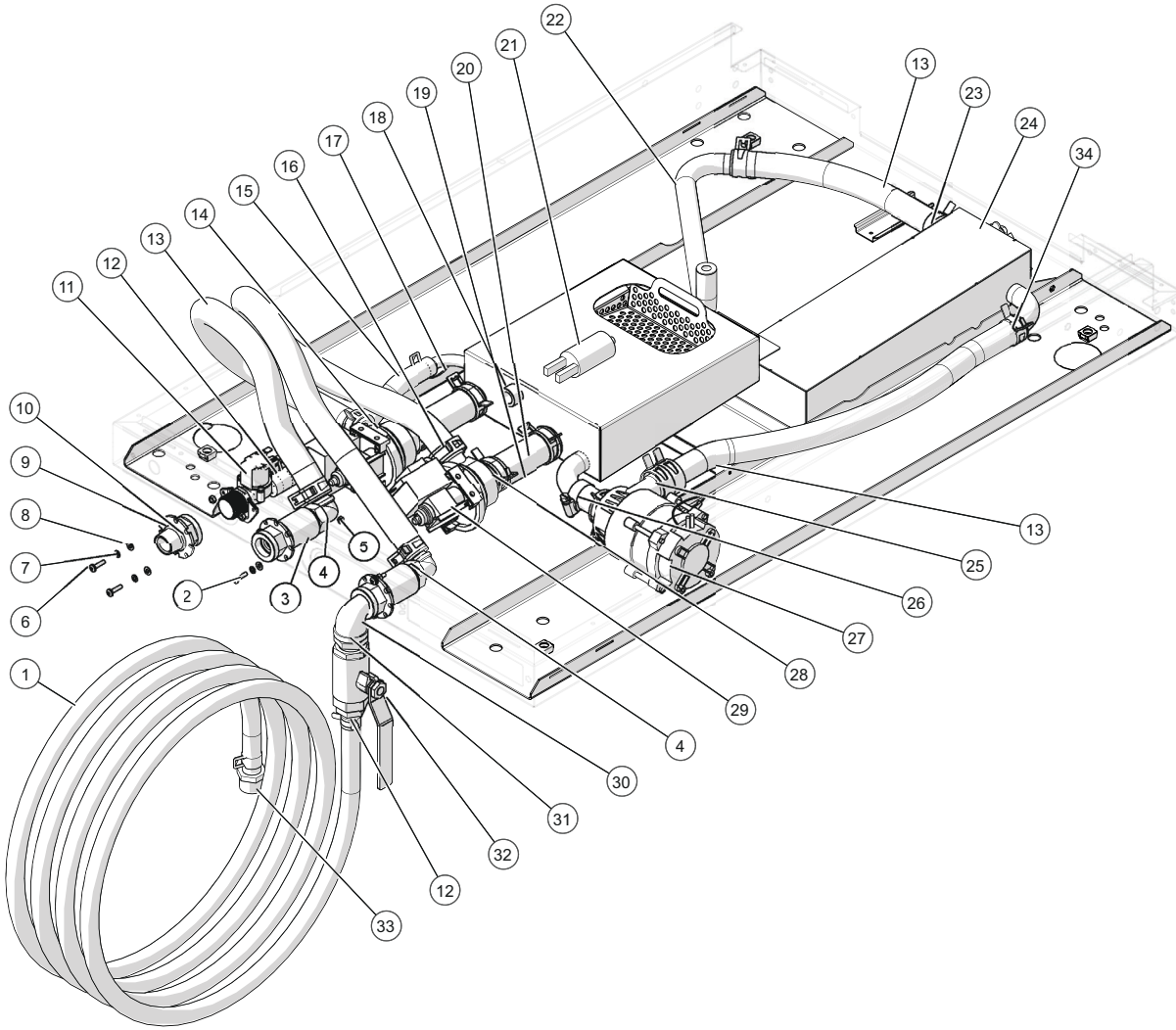

ID	Part No.	Description
1	5018306	GREASE COLLECTION HOSE ASSY
2	SC-22765	SCREW,M4x0.7X16MM PAN
3	FT-27254	COUPLING, 3/4 NPT X 3/4 NPT
4	FT-38298	ELBOW,3/4"NPT MALE X 3/4" BARB
5	NU-22286	M4-0.7 HEX NUT 18-8
6	SC-38240	SCREW,M4x0.7X16MM PAN
7	WS-22300	WASHER, M4 SPLIT LOCK
8	WS-22294	WASHER, FLAT M4 18-8 S/S
9	5024963	FITTING, G 3/4 BSP BY 3/4 NPT
10	WS-39293	WASHER, SEALING
11	VA-39298	VALVE SOLENOID, SINGLE PORT
12	CM-28145	CLAMP, HOSE, 20mm
13	HO-38929	HOSE, 3/4" ID (SOLD BY THE FOOT)
14	BG-38918	BEARING, FLANGED SLEEVE, 26MM
15	HO-28790	HOSE, 1/2" ID (SOLD BY THE FOOT)
16	BG-29085	BEARING, FLANGED SLEEVE, 20MM
17	FT-46162	FITTING, ELBOW 1/2 BARB - WELD
18	FT-29816	COUPLING,HALF,FEMALE,1/4" NPT
19	HO-38919	HOSE, 1" ID (SOLD BY THE FOOT)
20	FT-39676	FITTING, STRGHT 1" BARB TO WLD
21	MO-34636_CAP	CAPACITOR FOR MO-34636
22	1022791	TUBE,WASH,FORMED
23	FT-39675	FITTING, STRGHT 3/4 BRB TO WLD
24	5025596	ASSY, WATER HEATER TANK
25	CM-46838	CLAMP, SPRING, 35mm
26	CM-39763	CLAMP, SS, WORMGEAR
27	MO-34636	PUMP, WASH SYSTEM
28	CM-46839	CLAMP, SPRING, 36mm
29	DA-24973	PUMP, STEAM GENERATOR
30	EB-38854	ELBOW, 3/4 NPT, FEMALE X MALE
31	FT-29811	FITTING, 3/4 NPT HEX, NYLON
32	VA-29814	VALVE, BALL, 3/4" NPT, BRASS
33	FT-35203	FITTING, 1/2" BARB TO 3/4" NPT ADAPTOR
34	CM-46837	CLAMP, SPRING, 27mm

AR-7T Tablet Soap Injection Package

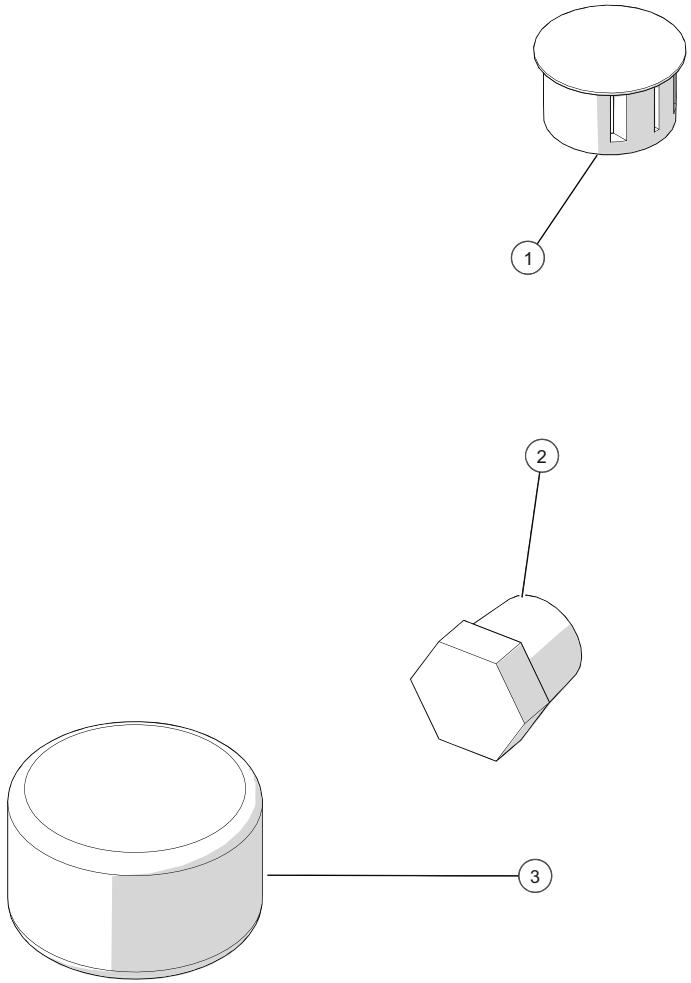

ID	Part No.	Description
1	PG-25536	5/8" HOLE PLUG
2	PG-29895	NPT PIPE PLUG, HEX HEAD, 1/4"
3	CE-36354	CLEANER, TABLET

AR-7T Liquid Soap Injection Package, Alto-Shaam Cleaner

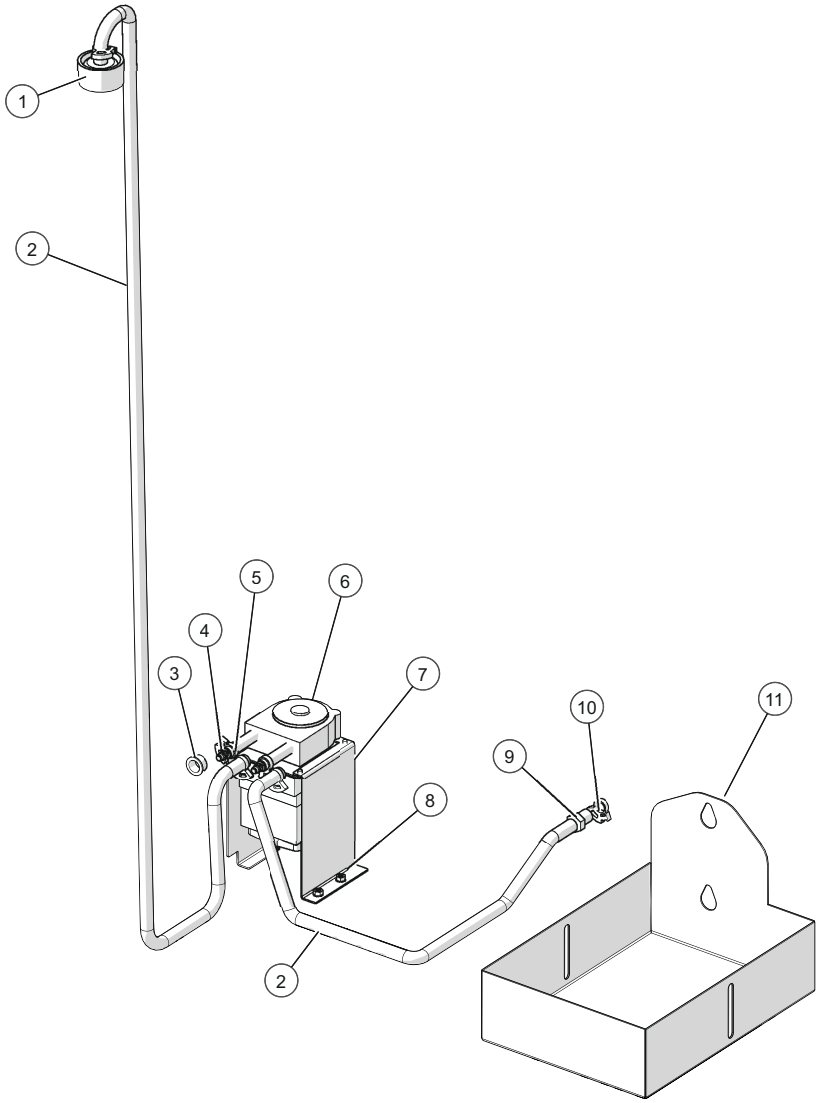

ID	Part No.	Description
1	CP-46870	DISPENSING CAP,38MM
2	HO-37315	HOSE, 1/4" ID, TAN (SOLD BY THE FT)
3	BU-3611	5/8" SNAP BUSHING BLACK
4	FT-35434	COUPLING, DOUBLE BARBED, 1/4"
5	SC-22271	SCREW,M4x0.7X6MM PAN
6	5023742	MOTOR ASSY,PUMP
7	1028658	BRACKET, SOAP PUMP, INVERTED
8	NU-36234	NUT, M5, KEPS
9	FT-29894	FITTING, 1/4" BARB TO 1/4" NPT
10	CM-37316	CLAMP, DOUBLE SNAP-GRIP, 1/2”
11	1018867	BRKT, LIQUID CLEANER

AR-7T Liquid Soap Injection Package, Ecolab Cleaner

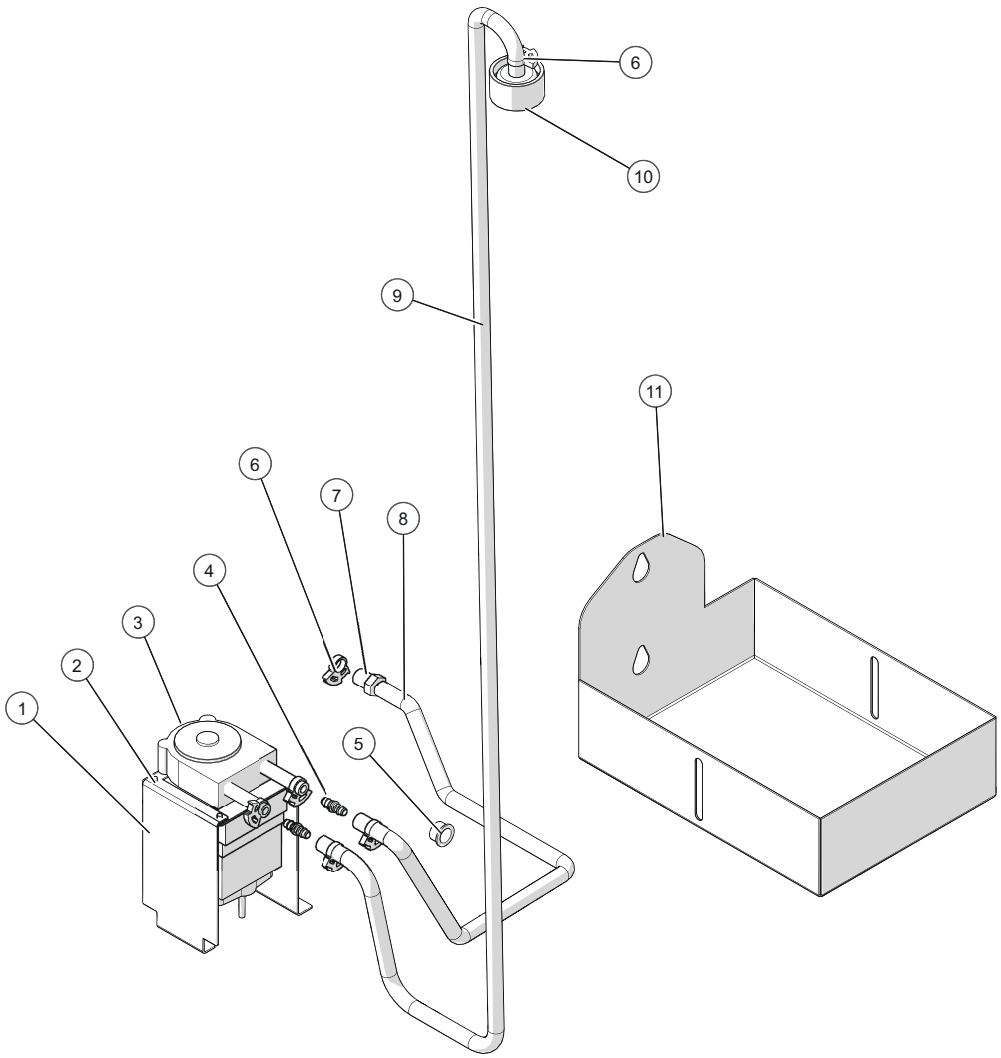

ID	Part No.	Description
1	1028658	BRACKET, SOAP PUMP, INVERTED
2	SC-22271	SCREW,M4x0.7X6MM PAN
3	5023742	MOTOR ASSY,PUMP
4	FT-35434	COUPLING, DOUBLE BARBED, 1/4"
5	BU-3611	5/8" SNAP BUSHING BLACK
6	CM-37316	CLAMP, DOUBLE SNAP-GRIP, 1/2”
7	FT-29894	FITTING, 1/4" BARB TO 1/4" NPT
8	HO-37315_25	HOSE, 1/4" ID, TAN, X 25" LG
9	HO-37315_60	HOSE, 1/4" ID, TAN, X 60" LG
10	CP-35082	DISPENSING CAP, LIQ CLEANER
11	1018867	BRKT, LIQUID CLEANER

AR-7T Spit Assembly, 7-Spit, V-Spit, Standard

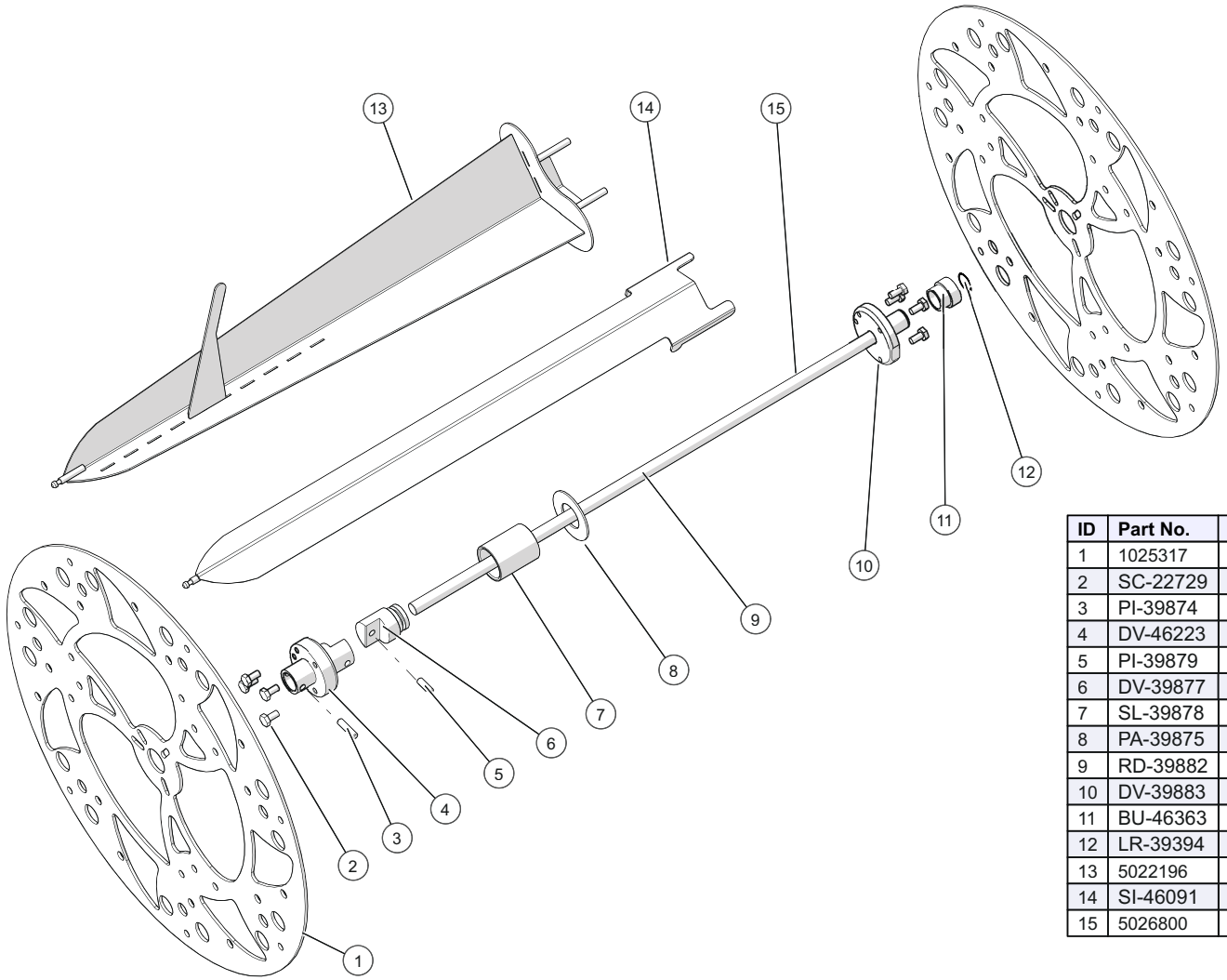

ID	Part No.	Description
1	1025317	DISK, 7-SPIT, ALL OPTIONS
2	SC-22729	SCREW 1/4-20 x 1/2" HEX HEAD
3	PI-39874	PIN, DRIVE HUB
4	DV-46223	HUB, DRIVE
5	PI-39879	PIN, 1/4"DIA X 3/4"LG
6	DV-39877	HUB, PINNED INTERFACE
7	SL-39878	COUPLING, INTERFACE
8	PA-39875	PLATE, 2.125" DIA
9	RD-39882	AXLE, 0.5" DIA, 22.200"LG
10	DV-39883	HUB, SLAVE SIDE
11	BU-46363	BUSHING, LARGE GROOVE
12	LR-39394	SNAP RING
13	5022196	TURKEY SPIT ASSB,SINGLE,AR-7T
14	SI-46091	V-SPIT ASSEMBLY, REGULAR
15	5026800	DRIVE AXLE ASSEMBLY, ONE PIN

AR-7T Spit Assembly, 7-Spit, Pierce Only

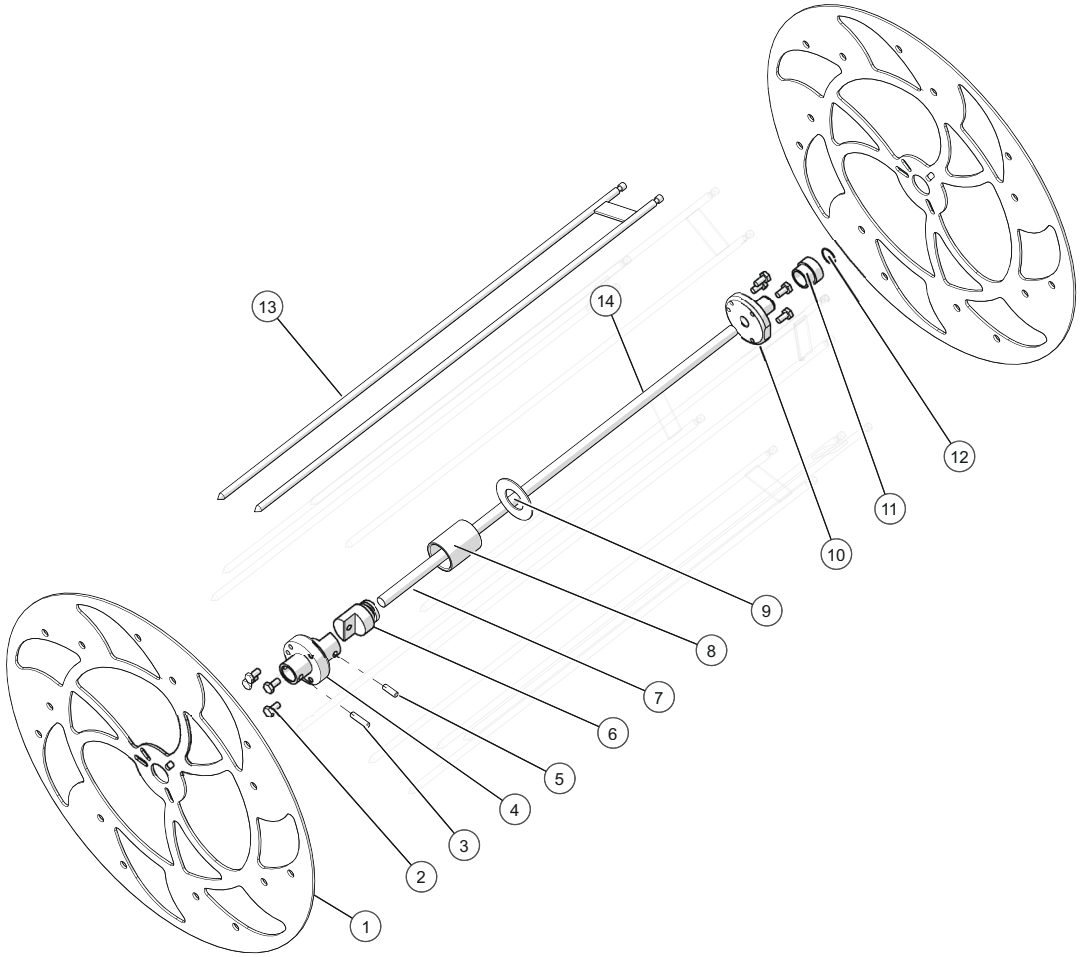

ID	Part No.	Description
1	1025319	DISK, 7-SPIT, PIERCE ONLY
2	SC-22729	SCREW 1/4-20 x 1/2" HEX HEAD
3	PI-39874	PIN, DRIVE HUB
4	DV-46223	HUB, DRIVE
5	PI-39879	PIN, 1/4"DIA X 3/4"LG
6	DV-39877	HUB, PINNED INTERFACE
7	RD-39882	AXLE, 0.5" DIA, 22.200"LG
8	SL-39878	COUPLING, INTERFACE
9	PA-39875	PLATE, 2.125" DIA
10	DV-39883	HUB, SLAVE SIDE
11	BU-46363	BUSHING, LARGE GROOVE
12	LR-39394	SNAP RING
13	SI-38390	SPIT,PIERCE,AR-7,.313",DIA.
14	5026800	DRIVE AXLE ASSEMBLY, ONE PIN

AR-7T Spit Assembly, 7-Spit, V-Spits Only

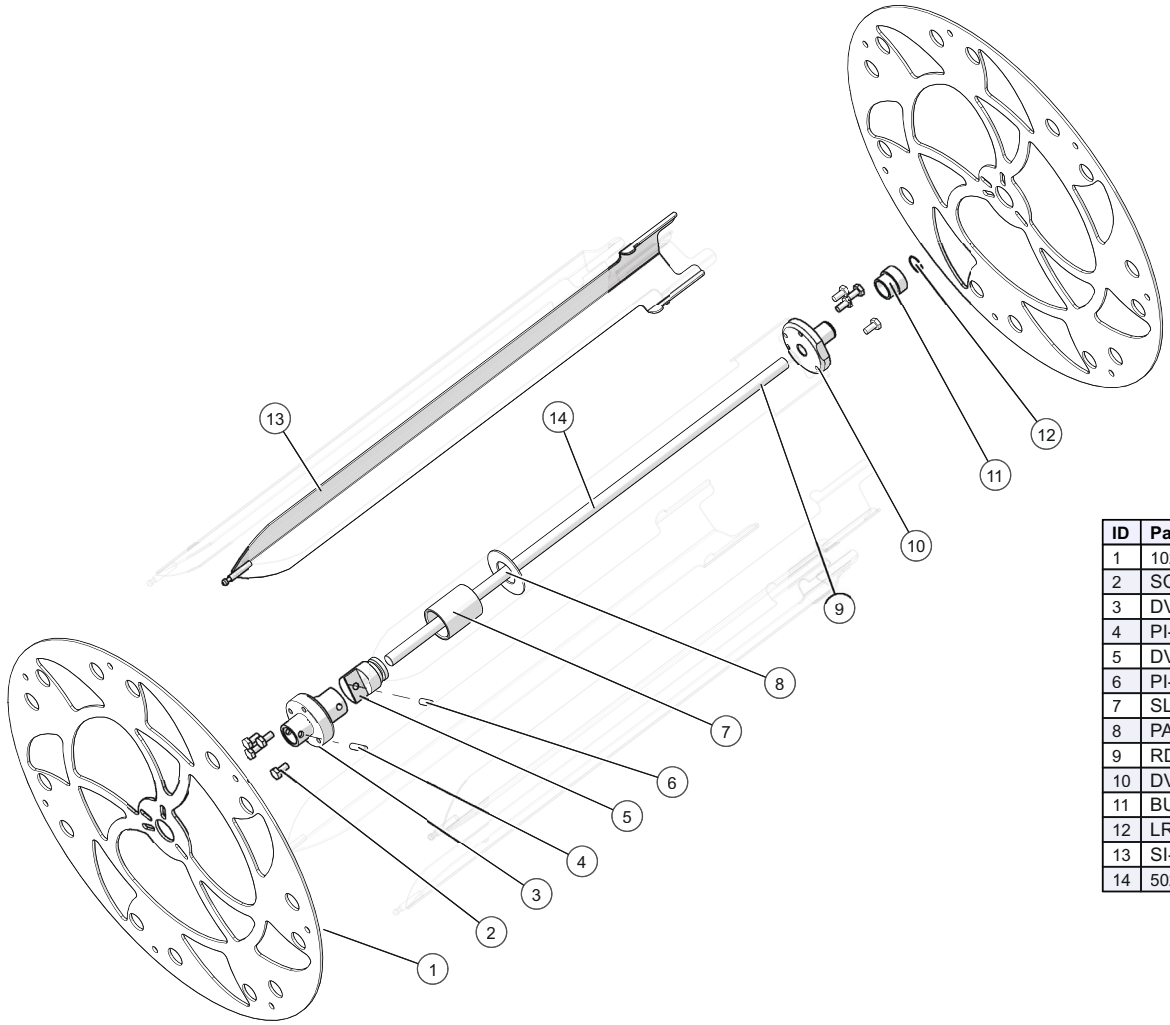

ID	Part No.	Description
1	1025318	DISK, 7-SPIT, V-SPITS ONLY
2	SC-22729	SCREW 1/4-20 x 1/2" HEX HEAD
3	DV-46223	HUB, DRIVE
4	PI-39874	PIN, DRIVE HUB
5	DV-39877	HUB, PINNED INTERFACE
6	PI-39879	PIN, 1/4"DIA X 3/4"LG
7	SL-39878	COUPLING, INTERFACE
8	PA-39875	PLATE, 2.125" DIA
9	RD-39882	AXLE, 0.5" DIA, 22.200"LG
10	DV-39883	HUB, SLAVE SIDE
11	BU-46363	BUSHING, LARGE GROOVE
12	LR-39394	SNAP RING
13	SI-46091	V-SPIT ASSEMBLY, REGULAR
14	5026800	DRIVE AXLE ASSEMBLY, ONE PIN

AR-7T Spit Assembly, 7-Spit, Pierce and Baskets

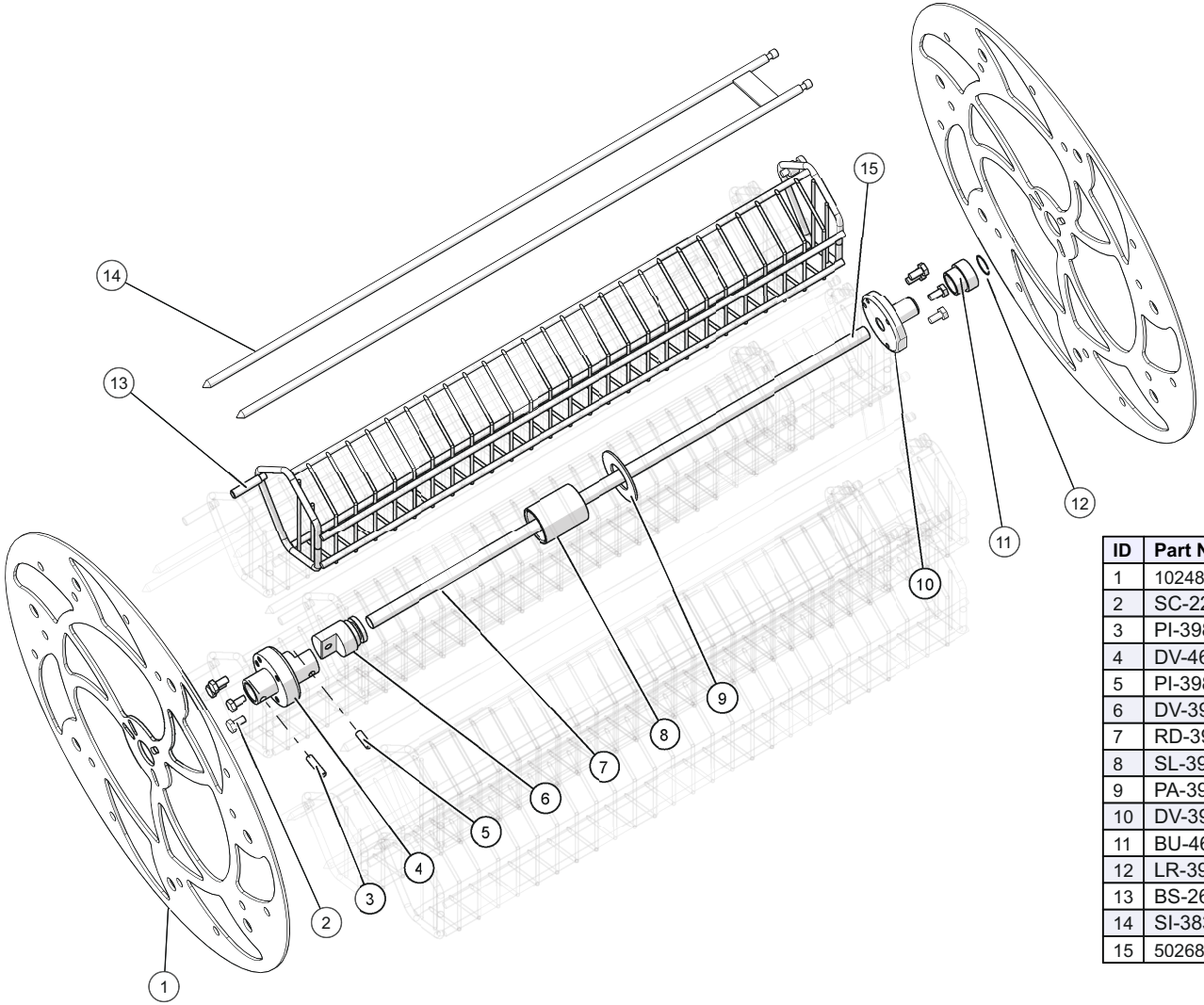

ID	Part No.	Description
1	1024855	DISK, 7-SPIT, PIERCE & BASKETS
2	SC-22729	SCREW 1/4-20 x 1/2" HEX HEAD
3	PI-39874	PIN, DRIVE HUB
4	DV-46223	HUB, DRIVE
5	PI-39879	PIN, 1/4"DIA X 3/4"LG
6	DV-39877	HUB, PINNED INTERFACE
7	RD-39882	AXLE, 0.5" DIA, 22.200"LG
8	SL-39878	COUPLING, INTERFACE
9	PA-39875	PLATE, 2.125" DIA
10	DV-39883	HUB, SLAVE SIDE
11	BU-46363	BUSHING, LARGE GROOVE
12	LR-39394	SNAP RING
13	BS-26019	BASKET, AR-7E
14	SI-38390	SPIT,PIERCE,AR-7,.313",DIA.
15	5026800	DRIVE AXLE ASSEMBLY, ONE PIN

AR-7T Spit Assembly, 7-Spit, Baskets Only

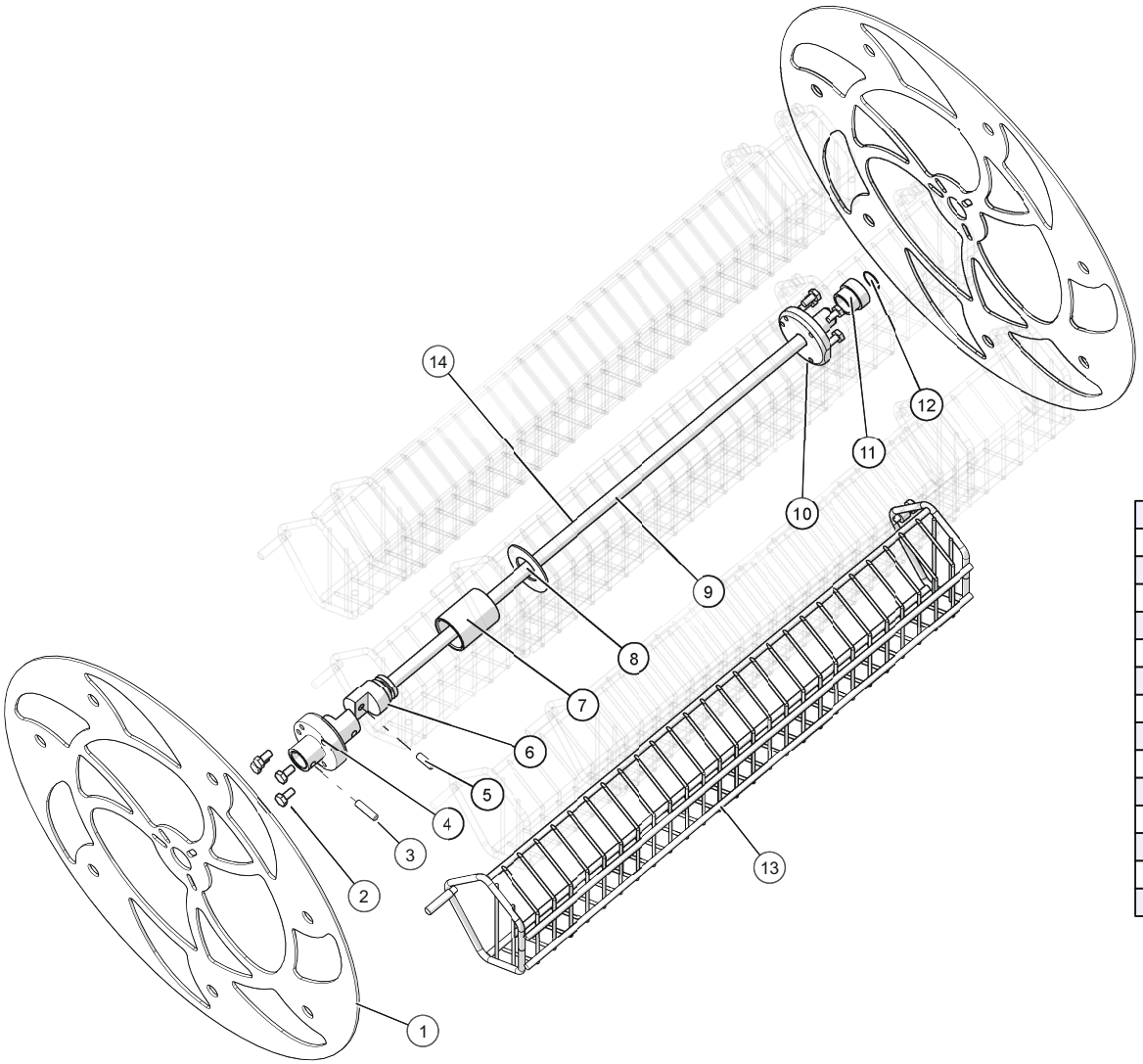

ID	Part No.	Description
1	1025320	DISK, 7-SPIT, BASKETS ONLY
2	SC-22729	SCREW 1/4-20 x 1/2" HEX HEAD
3	PI-39874	PIN, DRIVE HUB
4	DV-46223	HUB, DRIVE
5	PI-39879	PIN, 1/4"DIA X 3/4"LG
6	DV-39877	HUB, PINNED INTERFACE
7	SL-39878	COUPLING, INTERFACE
8	PA-39875	PLATE, 2.125" DIA
9	RD-39882	AXLE, 0.5" DIA, 22.200"LG
10	DV-39883	HUB, SLAVE SIDE
11	BU-46363	BUSHING, LARGE GROOVE
12	LR-39394	SNAP RING
13	BS-26019	BASKET, AR-7E
14	5026800	DRIVE AXLE ASSEMBLY, ONE PIN

AR-7T Spit Assembly, Large V-Spit Package

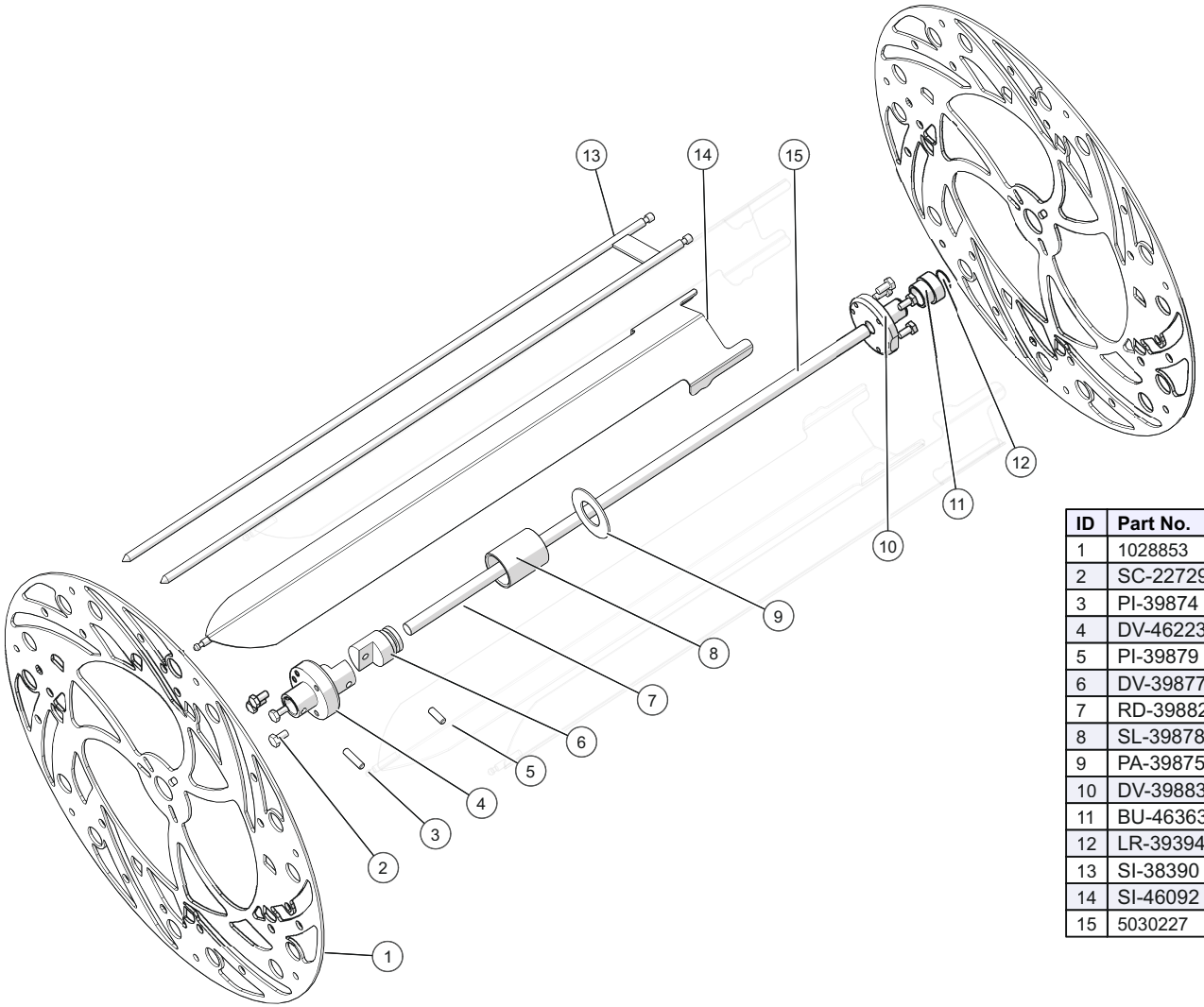

ID	Part No.	Description
1	1028853	DISK, V-SPIT, LARGE V, PIERCE
2	SC-22729	SCREW 1/4-20 x 1/2" HEX HEAD
3	PI-39874	PIN, DRIVE HUB
4	DV-46223	HUB, DRIVE
5	PI-39879	PIN, 1/4"DIA X 3/4"LG
6	DV-39877	HUB, PINNED INTERFACE
7	RD-39882	AXLE, 0.5" DIA, 22.200"LG
8	SL-39878	COUPLING, INTERFACE
9	PA-39875	PLATE, 2.125" DIA
10	DV-39883	HUB, SLAVE SIDE
11	BU-46363	BUSHING, LARGE GROOVE
12	LR-39394	SNAP RING
13	SI-38390	SPIT,PIERCE,AR-7,.313",DIA.
14	SI-46092	V-SPIT ASSEMBLY, LARGE
15	5030227	ASSEMBLY, AXLE DRIVE

AR-7HT Rack Package

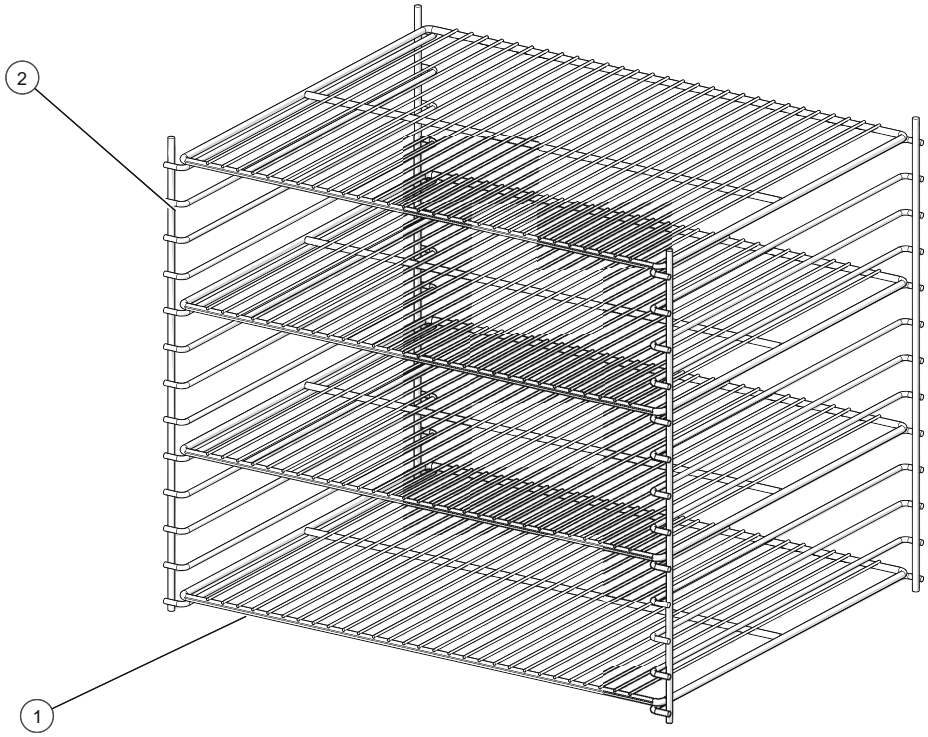

ID	Part No.	Description
1	SH-24720	SHELF, S/S
2	SR-38458	SIDE,RACK,WIRE,AR-7H

ALTO-SHAAM ASIA
Shanghai, China
Phone +86-21-6173 0336

ALTO-SHAAM CANADA
Concord, Ontario Canada
Toll Free Phone 866-577-4484
Phone +1-905-660-6781

ALTO-SHAAM CENTRAL & SOUTH AMERICA
Miami, FL USA
Phone +1-954-655-5727

ALTO-SHAAM MIDDLE EAST & AFRICA
Dubai, UAE
Phone +971 4 321 9712

ALTO-SHAAM MEXICO
Phone +52 1 477-717-3108

ALTO-SHAAM FRANCE, L.L.C.
Aix en Provence, France
Phone +33(0)4-88-78-21-73

ALTO-SHAAM GMBH
Bochum, Germany
Phone +49(0)234-298798-0

ALTO-SHAAM RUSSIA
Moscow, Russia
Phone +7-903-793-2331

ALTO-SHAAM

Menomonee Falls, WI 53052-0450, U.S.A.
Telephone 800-558-8744 | +1-262-251-3800 | alto-shaam.com