MFST5400 / MFST5455

ASSEMBLY INSTRUCTIONS
OPERATING INSTRUCTIONS
WARRANTY

CUSTOMER SERVICE 1-800-637-0005
www.eurotechseating.com

ASSEMBLY INSTRUCTIONS

MFST5400 / MFST5455

Remove all items from the carton. Verify all pieces before assembly.

PARTS LIST

Key	Description	Part	Qty.
A	Backrest		1
B	Seat Cushion / Mechanism		1
C	Armrests (1 left & 1 right armrest)		2
D	Arm Width Adj. Knob with 1 Flat Washer and 1 Split Lock Washer		2
E	Back Post		1
F	Short Back Post Screw 8x10mm		1
G	Back Post Cover		1
H	Back Post Cover Screw 4x20mm		2
I	Long Back Post Screw 10x25mm with 1 Flat Washer and 1 Split Lock Washer		1
J	Star Base		1
K	Seat Post Cover		1
L	Seat Post (Cylinder)		1
M	Caster		5
N	Allen Wrench (M5,M6)	M5 M6	2

ASSEMBLY INSTRUCTIONS

MFST5400 / MFST5455

Remove all items from the carton. Verify all pieces before assembly.

STEP 1

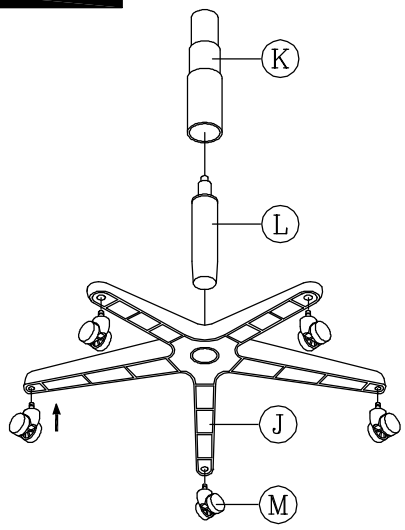

Press the Casters (M) into the holes at the end of each leg of the Base (J).
Insert the bottom end of the Seat Post (L) into the center hole of the Base (J).
Slide Seat Post Cover (K) over the Seat Post (L).

STEP 2

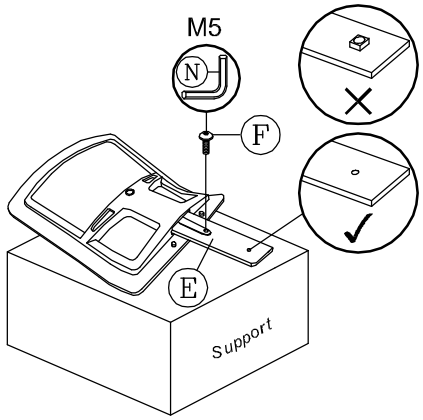

Please be careful to use the correct, Short Back Post Screw (F) and the correct thinner M5 Allen Wrench (N).
Attach Back Post (E) to Backrest (A) using one Back Post Screw (F).
Tighten securely using the enclosed M5 Allen Wrench (N).

STEP 3

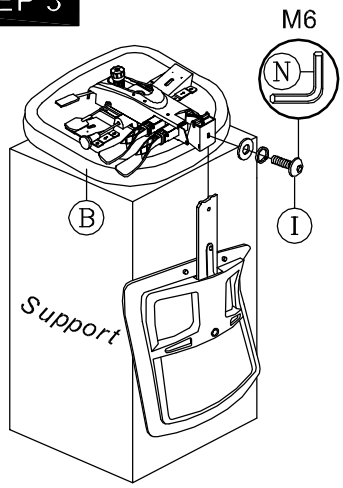

Please be careful to use the correct, Long Back Post Screw with Flat Washer and Split Lock Washer (I) and the correct thicker M6 Allen Wrench (N).
Insert Back Post (E) into rear of mechanism and secure using one Back Post Screw with Flat Washer and Split Lock Washer (I).
Tighten securely using the enclosed M6 Allen Wrench (N).

STEP 4

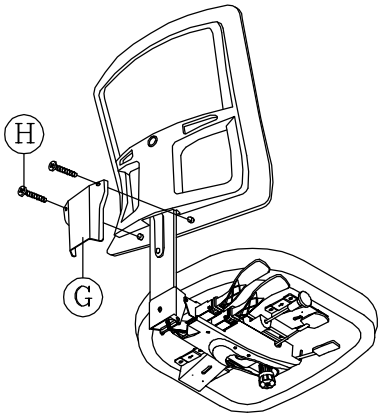

Please be careful to use the correct Back Post Cover Screws (H) and the correct thicker M6 Allen Wrench (N).
Attach Back Post Cover (G) to Back Post (E) using two Back Post Cover Screws (H).
Tighten securely using the enclosed M6 Allen Wrench (N).

STEP 5

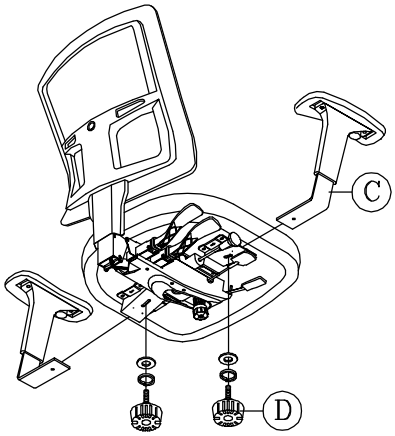

To attach your armrests, insert Left and Right Armrests (C) on the correct sides of the chair into the brackets located under each side of the Seat Cushion (B).
Insert the Arm Width Adjustment Knobs (D) through the slots in the brackets into the hole in the arm. After the arms are set at your desired width, tighten securely.
You may adjust the width of your armrests at any time. Please see the Arm Width Adjustment section of the enclosed Operating Instructions for directions.

STEP 6

Now turn the assembled seat upright and locate the center hole of the Mechanism over the Seat Post. Push down firmly until the connection is secure.
Before using your chair, ensure that all the screws are tightened fully for safety.
You can now enjoy the comfort of your new chair!
Note:
Please keep the enclosed Allen Wrenches and check all screws every six months to ensure they remain tightly fastened.

PREVENTIVE MAINTENANCE AND WARNING!

- USE THIS PRODUCT ONLY FOR SEATING ONE PERSON AT A TIME.
- DO NOT USE THIS CHAIR AS A STEP STOOL / LADDER.
- DO NOT SIT ON ANY PART OF THE CHAIR EXCEPT THE SEAT.
- DO NOT USE CHAIR ON UNEVEN FLOOR SURFACES.
- DO NOT USE CHAIR UNLESS ALL BOLTS, SCREWS AND KNOBS ARE TIGHTENED.
- **EVERY SIX MONTHS, PLEASE MAKE SURE ALL BOLTS, SCREWS AND KNOBS ARE FULLY TIGHTENED TO ENSURE STABILITY.**
- IF ANY PARTS ARE MISSING, BROKEN, DAMAGED OR WORN, STOP USE OF THE PRODUCT UNTIL REPAIRS ARE MADE USING FACTORY AUTHORIZED PARTS.
- DISPOSE OF PACKAGING PROPERLY. PLASTIC BAG IS NOT A TOY. DO NOT USE PLASTIC BAG AS HEAD COVERING - IT MAY CAUSE SUFFOCATION.
- FAILURE TO FOLLOW THESE WARNINGS COULD RESULT IN SERIOUS INJURY.
- NOTE: SOME SCREWS MAY BE PREASSEMBLED. IF PREASSEMBLED, IGNORE ASSEMBLY INSTRUCTIONS.

OPERATING INSTRUCTIONS

MFST5400 / MFST5455

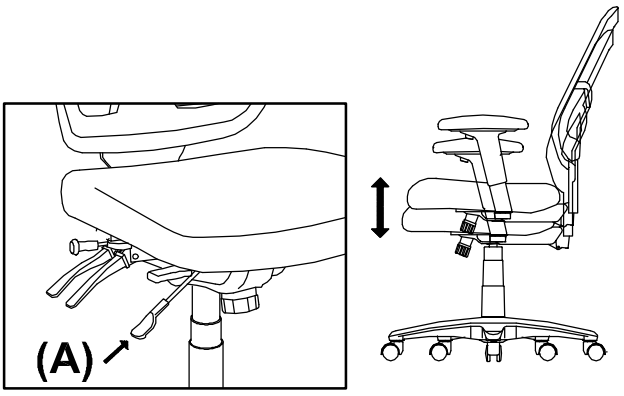

A. SEAT HEIGHT ADJUSTMENT

While seated, pull the Seat Height Adjustment lever up and hold it while raising or lowering the seat to change the seat height.
(Please note the Seat Height Adjustment Lever is on the right side of the seat and is the lever that is second from the front).
When the lever is released, the seat height is locked.
The Seat Height Adjustment range of motion is approximately 9.4".

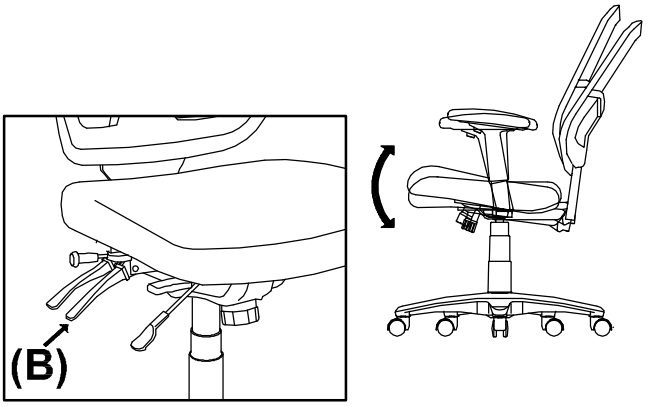

B. SEAT ANGLE ADJUSTMENT

While seated, pull the Seat Angle Adjustment lever up and lean back to find your preferred seat angle.
(Please note the Seat Angle Adjustment Lever is on the right side of the seat and is the lever that is fourth from the front). When the desired seat angle is achieved, push the lever back down.
Your seat angle is now locked in the desired position,
The Seat Angle Adjustment range of motion is approximately 17° and the seat can be locked at any point on that range of motion.

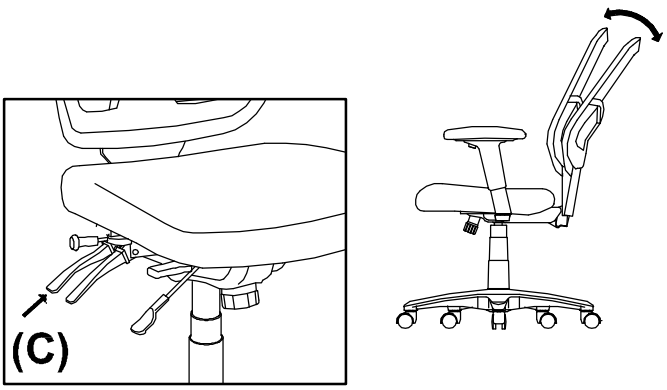

C. BACK ANGLE ADJUSTMENT

While seated, pull the Back Angle Adjustment Lever up and lean back to find your preferred back angle.
(Please note the Back Angle Adjustment Lever is on the right side of the seat and is the lever that is the fifth from the front). When the desired back angle is achieved, push the lever back down.
Your back angle is now locked in the desired position.
The Back Angle Adjustment range of motion is approximately 6° and the back can be locked at any point on that range of motion.

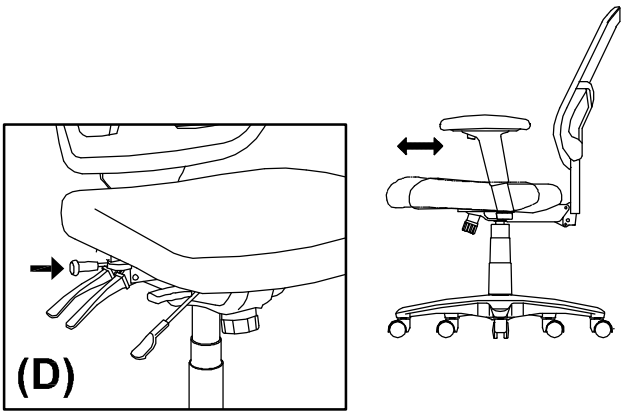

D. SLIDING SEAT ADJUSTMENT

While seated, pull the Seat Angle Adjustment Lever out and move the seat forwards/backwards until your desired position is reached.
(Please note the Seat Angle Adjustment Lever is on the right side of the seat and is the lever that is the third from the front). When the lever is released, the seat is locked into your desired position.
The Sliding Seat Adjustment range of motion is approximately 2".

OPERATING INSTRUCTIONS

MFST5400 / MFST5455

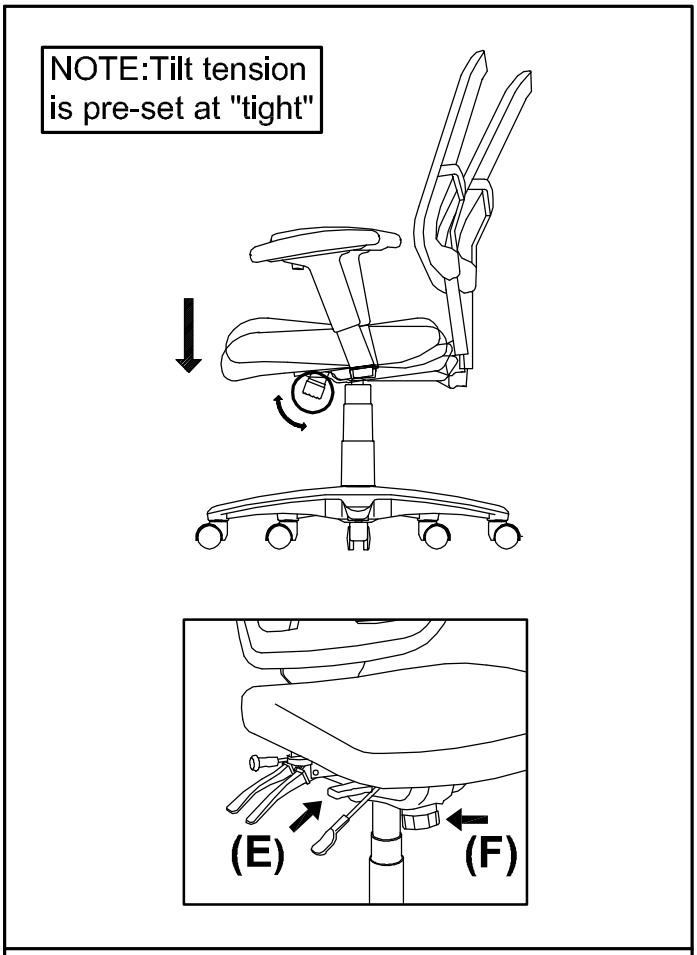

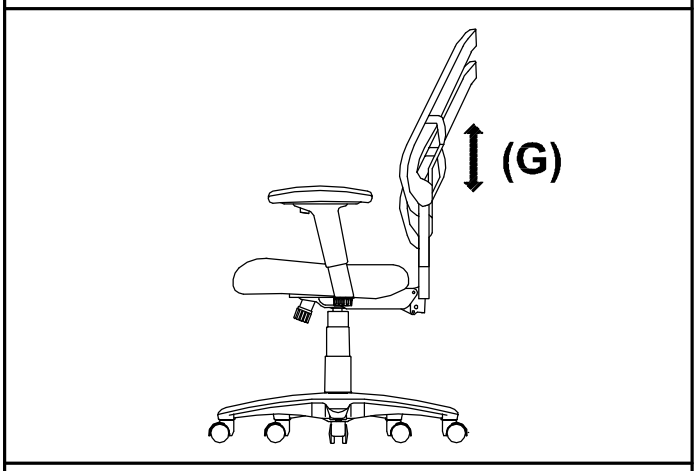

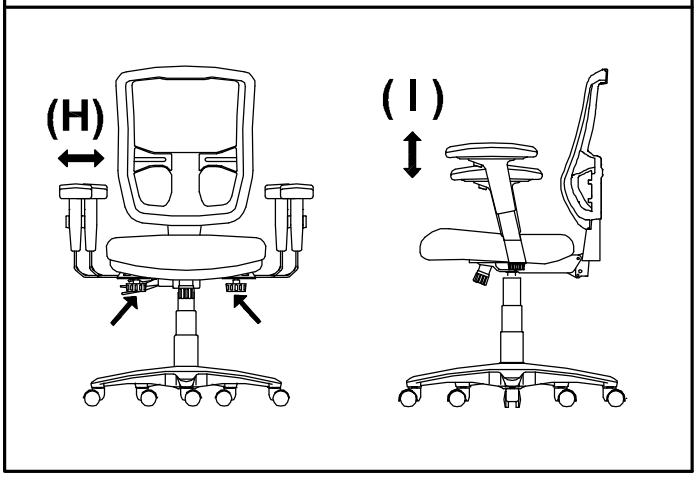

E. FORWARD TILT LEVER

While seated, you may activate the forward tilt by first lifting the Seat Angle Adjustment Lever (the fourth lever from the front) up and then pulling the Forward tilt Lever backwards. (Please note, the Forward Tilt Lever is under the front of the right side of the seat and slightly recessed from the side).
This will allow you to lean your seat/back in a more ergonomically friendly forward position for typing.
When the desired forward tilt angle is achieved, push the Seat Angle Adjustment lever back down.
Your Forward Tilt Angle is now locked in the desired position. The Forward Seat Tilt range of motion is approximately 6° and the forward tilt angle can be locked at any point on that range of motion.
In order to disengage the Forward Tilt option, first please lift the Seat Angle Adjustment Lever.
While leaning back, please push the Forward Tilt Lever forwards.
The Forward Tilt function is now disengaged and you may push the Seat Angle Adjustment Lever down when your seat angle is in your desired position.

F. TILT TENSION

To adjust the tension you experience while leaning backwards in your chair, rotate the knob located underneath the seat to the right (to increase tension) or to the left (to decrease tension).

G. BACKREST HEIGHT ADJUSTMENT

To raise your backrest, slowly lift the back up until you hear a series of 4 to 5 clicks. Each click represents a position where the backrest will lock into place. To lower the backrest, raise the backrest all the way up until the tension is released.
The backrest will now return to the lowest position without stopping. Now repeat the previous steps to raise your backrest up to your desired position.
The Back Height Adjustment range of motion is approximately 2.8".

H. ARM WIDTH ADJUSTMENT

To adjust the arm width, loosen slightly the knob holding each arm in place. Move each arm in or out to your desired width. After reaching your desired width, securely tighten the knob.
The Arm Width range of motion is approximately 2".

I . ARM HEIGHT ADJUSTMENT

While seated, locate the button under the front of the armpad. Press the button to raise or lower the height of the arms to your desired height.

OUR PROMISE.

They say with age comes wisdom. And while we've learned a lot since we sold our first office chair in 1979, even then we knew that superior craftsmanship and design are essential ingredients in delivering real value for our customers. All these years later, those three simple pillars still stand behind our promise of exceptional seating with every chair we sell.

DESIGN CRAFTSMANSHIP VALUE
Eurotech. Sit Smarter.

THE EUROTECH WARRANTY

- For all products except for 24/7 chairs (see below), Eurotech warrants to the original purchaser all components for the life of the product with the exception of upholstery and foam, which will be warranted for five years.

- For 24/7 chairs, Eurotech warrants to the original purchaser of all 24/7 chairs all components for 10 years with the exception of upholstery and foam which will be warranted for 2 years.

- Eurotech warrants to the original purchaser that all parts will be free from material defects. Eurotech will repair or replace, at its option, any unaltered components.

- Eurotech does not warrant any aftermarket hardware that is installed on the product.

- Eurotech's warranty is limited to the normal use of the product in a forty hour work week and a 250 lb. weight limit unless otherwise noted.

- Eurotech shall NOT be liable for consequential or incidental damage arising from any product defect.

- Eurotech's warranty is limited to replacement or repair and does not cover cost of transportation and labor. There are no other warranties expressed or implied other than those specifically described.

- Eurotech does not warrant customer's own material.

This warranty is made as of 9/15/16. Please see http://www.eurotechseating.com/warranty-information for any updates and/or revisions to this warranty.