CNM SERIES

CNM0330**0, CNM0430**0, CNM0430**6, CNM0530**0, CNM0630**6, CNM0330**5, CNM0430**5, CNM0530**5 and CNM0630**5

ILLUSTRATED PARTS LIST

Release Date: April 19, 2018
Publication Number: 548000034
Revision Date: April 19, 2018
Revision: A

Visit the Cornelius web site at http://ice.cornelius.com for all your Literature needs.

Notice

The products, technical information, and instructions contained in this manual are subject to change without notice. These instructions are not intended to cover all details or variations of the equipment, nor to provide for every possible contingency in the installation, operation or maintenance of this equipment. This manual assumes that the person(s) working on the equipment have been trained and are skilled in working with electrical, plumbing, pneumatic, and mechanical equipment. It is assumed that appropriate safety precautions are taken and that all local safety and construction requirements are being met, in addition to the information contained in this manual.

This Product is warranted only as provided in Cornelius' Commercial Warranty applicable to this Product and is subject to all of the restrictions and limitations contained in the Commercial Warranty.

Cornelius will not be responsible for any repair, replacement or other service required by or loss or damage resulting from any of the following occurrences, including but not limited to, (1) other than normal and proper use and normal service conditions with respect to the Product, (2) improper voltage, (3) inadequate wiring, (4) abuse, (5) accident, (6) alteration, (7) misuse, (8) neglect, (9) unauthorized repair or the failure to utilize suitably qualified and trained persons to perform service and/or repair of the Product, (10) improper cleaning, (11) failure to follow installation, operating, cleaning or maintenance instructions, (12) use of "non-authorized" parts (i.e., parts that are not 100% compatible with the Product) which use voids the entire warranty, (13) Product parts in contact with water or the product dispensed which are adversely impacted by changes in liquid scale or chemical composition.

Correct Disposal of this Product

RECYCLE

This marking indicates that this product should not be disposed with other household wastes throughout the EU. To prevent possible harm to the environment or human health from uncontrolled waste disposal, recycle it responsibly to promote the sustainable reuse of material resources. To return your used device, please use the return and collection systems or contact the retailer where the product was purchased. They can take this product for environmental safe recycling.

Trademarks and Copyrights

This document contains proprietary information and it may not be reproduced in any way without permission from Cornelius. This document contains the original instructions for the unit described.

CORNELIUS INC
101 Regency Drive
Glendale Heights, IL
Tel: + 1 800-238-3600

Printed in U.S.

Contact Information

To inquire about current revisions of any documentation or assistance with any Cornelius product, contact:

www.cornelius.com
800-238-3600

TABLE OF CONTENTS

NOMENCLATURE 1
CABINET PART LIST 2
WATER SYSTEM PART LIST 5
AIR COOLED PART LIST 8
WATER COOLED PART LIST 11
REMOTE PART LIST 14
ELECTRICAL PART LIST 16

NOMENCLATURE

This parts list contains the service parts available for the following CNM Series.

CNM03300**	**115/60/1**
CNM04300**	**115/60/1**
CNM04306**	**208-230/60/1**
CNM05300**	**115/60/1**
CNM06306**	**208-230/60/1**
CNM03305**	**220-240/50/1**
CNM04305**	**220-240/50/1**
CNM05305**	**220-240/50/1**
CNM06305**	**220-240/50/1**

NOTE: * = Represent Condenser Type and Cube Size Refer below for more details.

Model Number Example:

CNM0330AH0

CNM = Cornelius Nordic Modular

03 = 300 lb, in 24 hours capacity

30 = 30 inch wide cabinet

A = Air Cooled Condenser, W = Water Cooled Condenser, R = Remote Cooled Condenser

H = Half Cube Size, F = Full Cube Size G = Grande Cube Size

0 = 115 Volt, 5 = 220-240 V / 50 Hz / 1 Phase 6 = 208-230 Volt / 60 Hz / 1 Phase 7 = 3 Phase

Check the model number on the data plate and refer to the correct listing for the specific component.

Check carefully that the correct part is identified and ordered.

© 2018, Cornelius Inc.

Publication Number: 548000034

CABINET PART LIST

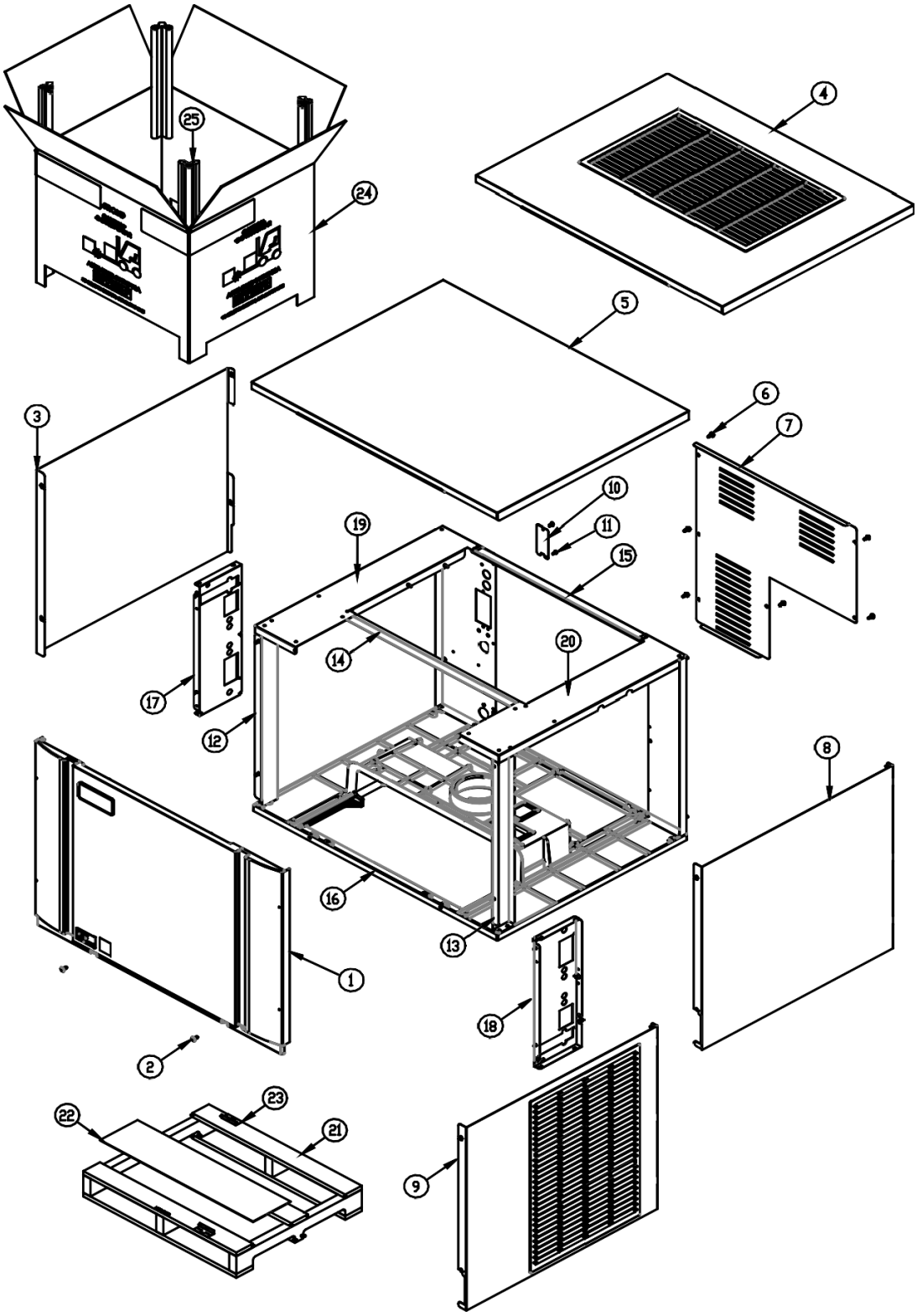

Figure 1.

 © 2018, Cornelius Inc.

NOTE: * = Represent Condenser Type and Cube Size Refer page 1 for more details.

Item No.	Model Number					Description
	CNM0330**0	CNM0430**0	CNM0430**6	CNM0530**0	CNM0630**6	
	115/60/1	115/60/1	208-230/60/1	115/60/1	208-230/60/1	Machine Voltage
1.	2031540-01S	2031540-01S	2031540-01S	2031540-01S	2031540-01S	Front Panel
2.	9031237-01	9031237-01	9031237-01	9031237-01	9031237-01	Front Panel Screws
3.	3022007-02	3022007-02	3022007-02	3022007-02	3022007-02	Left Side Panel
4.	2101496-02S	2101496-02S	2101496-02S	2101496-02S	2101496-02S	Top Panel-Air Cooled
5.	3022012-03	3022012-03	3022012-03	3022012-03	3022012-03	Top Panel-Remote and Water Cooled
6.	9031046-01	9031046-01	9031046-01	9031046-01	9031046-01	Rear Cover Screws
7.	3013634-01	3013634-01	3013634-01	3013634-01	3013634-01	Rear Cover
8.	3022007-03	3022007-03	3022007-03	3022007-03	3022007-03	Right Side Panel-Remote and Water Cooled
9.	2101495-01S	2101495-01S	2101495-01S	2101495-01S	2101495-01S	Right Side Panel-Air Cooled
10.	3013674-01	3013674-01	3013674-01	3013674-01	3013674-01	Junction Box Cover
11.	9031046-01	9031046-01	9031046-01	9031046-01	9031046-01	Junction Box Screw
12.	2021786-01	2021786-01	2021786-01	2021786-01	2021786-01	Left Front Corner Post
13.	2021786-02	2021786-02	2021786-02	2021786-02	2021786-02	Right Front Corner post
14.	3013637-02	3013637-02	3013637-02	3013637-02	3013637-02	Brace 30 Inch
15.	3013636-01	3013636-01	3013636-01	3013636-01	3013636-01	Rear Brace
16.	9051725-02	9051725-02	9051725-02	9051725-02	9051725-02	Base
17.	2021784-01	2021784-01	2021784-01	2021784-01	2021784-01	Front Left Brace
18.	2021785-01	2021785-01	2021785-01	2021785-01	2021785-01	Front Right Brace
19.	2021780-01	2021780-01	2021780-01	2021780-01	2021780-01	Right Side Framework 30"Assembly
20.	2021781-01	2021781-01	2021781-01	2021781-01	2021781-01	Left Side Framework 30"Assembly
21.	9011369-02	9011369-02	9011369-02	9011369-02	9011369-02	Elevation Skid 30 Inch
22.	9011378-01	9011378-01	9011378-01	9011378-01	9011378-01	Carton Liner 30 Inch
23.	9051765-01	9051765-01	9051765-01	9051765-01	9051765-01	Shipping Bracket 2 Req.(Field Installed)
24.	9011374-02	9011374-02	9011374-02	9011374-02	9011374-02	Carton, Elevation 30 Inch
25.	9011320-15	9011320-15	9011320-15	9011320-15	9011320-15	Corner Post (Each), Elevation, (4 Required)
26.	9031026-04P	9031026-04P	9031026-04P	9031026-04P	9031026-04P	Pop Rivets Not Shown (Package of 10)

© 2018, Cornelius Inc.

Publication Number: 548000034

NOTE: * = Represent Condenser Type and Cube Size Refer page 1 for more details.

220-240/50/1 - Machine Voltage					
Item No.	Model Number				Description
	CNM0330**5	CNM0430**5	CNM0530**5	CNM0630**5	
1.	2031540-01S	2031540-01S	2031540-01S	2031540-01S	Front Panel
2.	9031237-01	9031237-01	9031237-01	9031237-01	Front Panel Screws
3.	3022007-02	3022007-02	3022007-02	3022007-02	Left Side Panel
4.	2101496-02S	2101496-02S	2101496-02S	2101496-02S	Top Panel-Air Cooled
5.	Not Used	Not Used	3022012-03	3022012-03	Top Panel-Remote and Water Cooled
6.	9031046-01	9031046-01	9031046-01	9031046-01	Rear Cover Screws
7.	3013634-01	3013634-01	3013634-01	3013634-01	Rear Cover
8.	Not Used	Not Used	3022007-03	3022007-03	Right Side Panel-Remote and Water Cooled
9.	2101495-01S	2101495-01S	2101495-01S	2101495-01S	Right Side Panel-Air Cooled
10.	3013674-01	3013674-01	3013674-01	3013674-01	Junction Box Cover
11.	9031046-01	9031046-01	9031046-01	9031046-01	Junction Box Screw
12.	2021786-01	2021786-01	2021786-01	2021786-01	Left Front Corner Post
13.	2021786-02	2021786-02	2021786-02	2021786-02	Right Front Corner post
14.	3013637-02	3013637-02	3013637-02	3013637-02	Brace 30 Inch
15.	3013636-01	3013636-01	3013636-01	3013636-01	Rear Brace
16.	9051725-02	9051725-02	9051725-02	9051725-02	Base
17.	2021784-01	2021784-01	2021784-01	2021784-01	Front Left Brace
18.	2021785-01	2021785-01	2021785-01	2021785-01	Front Right Brace
19.	2021780-01	2021780-01	2021780-01	2021780-01	Right Side Framework 30"Assembly
20.	2021781-01	2021781-01	2021781-01	2021781-01	Left Side Framework 30"Assembly
21.	9011369-02	9011369-02	9011369-02	9011369-02	Elevation Skid 30 Inch
22.	9011378-01	9011378-01	9011378-01	9011378-01	Carton Liner 30 Inch
23.	9051765-01	9051765-01	9051765-01	9051765-01	Shipping Bracket 2 Req. (Field Installed)
24.	9011374-02	9011374-02	9011374-02	9011374-02	Carton, Elevation 30 Inch
25.	9011320-15	9011320-15	9011320-15	9011320-15	Corner Post (Each), Elevation,(4 Required)
26.	9031026-04P	9031026-04P	9031026-04P	9031026-04P	Pop Rivets Not Shown (Package of 10)

 © 2018, Cornelius Inc.

WATER SYSTEM PART LIST

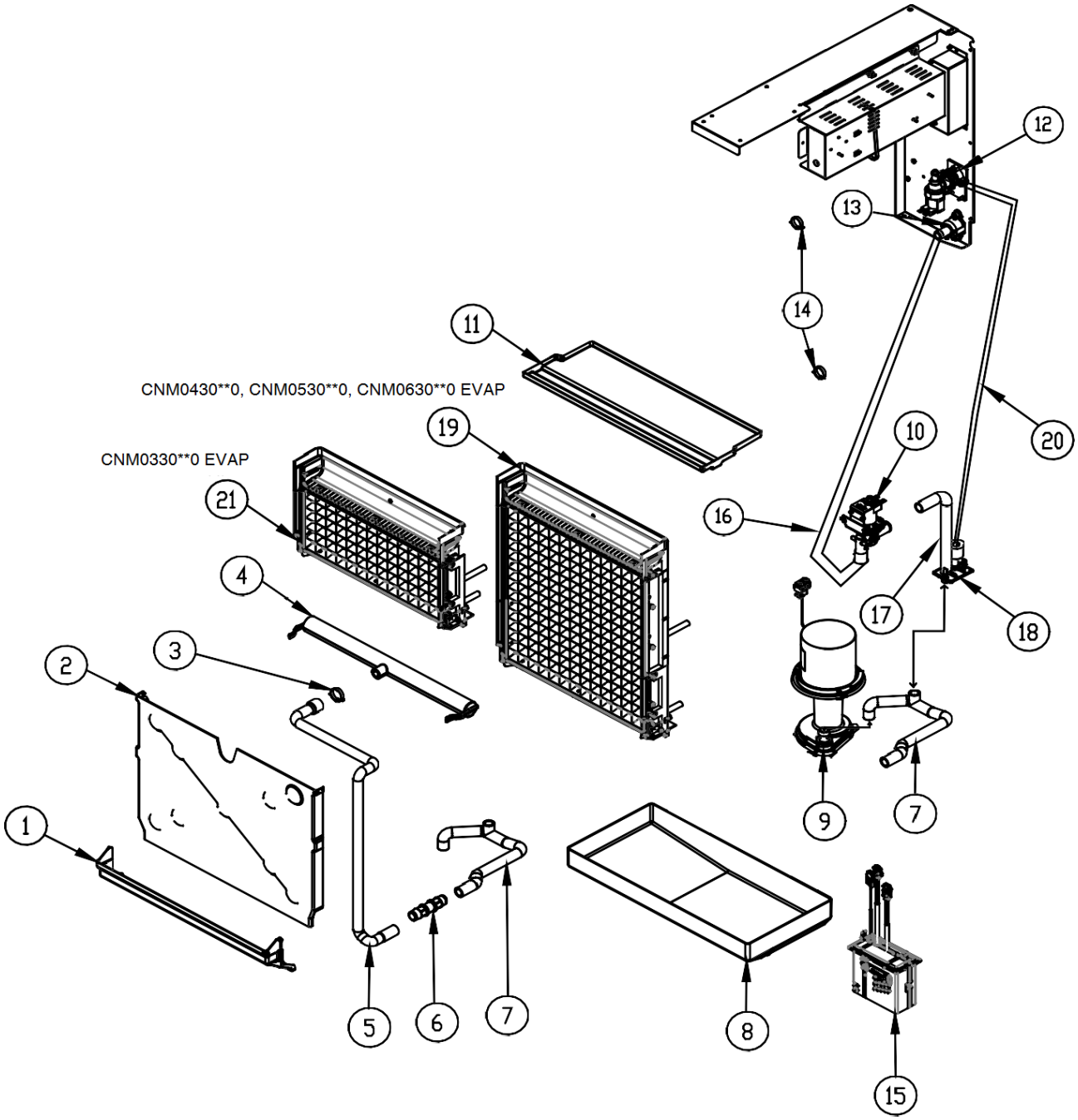

Figure 2.

The Model Number of the machine has a designator for the Cube Size:

Example:	CNM0430A**F**0	**F** = Full Cube	Cube Size = 7/8 x 7/8 x 7/8
	CNM0430A**H** 0	**H** = Half Cube	Cube Size = 3/8 x 7/8 x 7/8

NOTE: * = Represent Condenser Type and Cube Size Refer page 1 for more details.

Sl. No	Model					Description
	CNM0330**0	CNM0430**0	CNM0430**6	CNM0530**0	CNM0630**6	
	115/60/1	115/60/1	208-230/60/1	115/60/1	208-230/60/1	Machine Voltage
1.	9051736-01	9051736-01	9051736-01	9051736-01	9051736-01	Lower Curtain Assembly
2.	9051726-01	9051726-02	9051726-02	9051726-02	9051726-02	Evaporator Cover
3.	9021010-05	9021010-05	9021010-05	9021010-05	9021010-05	Hose Clamp, Plastic
4.	9051766-01	9051766-01	9051766-01	9051766-01	9051766-01	Water Distribution Tube Assembly
5.	9051749-01	9051749-02	9051749-02	9051749-02	9051749-02	Water Tube, Upper
6.	9091177-01	9091177-01	9091177-01	9091177-01	9091177-01	Coupler, Straight, 5/8 I.D. Tubing
7.	9051748-01	9051748-01	9051748-01	9051748-01	9051748-01	Water Tube, Sump
8.	9051737-01	9051737-01	9051737-01	9051737-01	9051737-01	Sump/Water Trough
9.	2062336-01	2062336-01	2062336-02	2062336-01	2062336-02	Water Pump
10.	9041105-04	9041105-04	9041105-05	9041105-04	9041105-05	Purge Valve
11.	9051738-01	9051738-01	9051738-01	9051738-01	9051738-01	Top Cover
12.	9041108-01	9041108-01	9041108-02	9041108-01	9041108-02	Water Inlet Valve
13.	9091140-01	9091140-01	9091140-01	9091140-01	9091140-01	Drain Fitting
14.	9021010-04	9021010-04	9021010-04	9021010-04	9021010-04	Hose Clamp, Plastic
15.	1051224-01	1051224-01	1051224-01	1051224-01	1051224-01	Float Switch Assembly (Includes Instructions)
16.	3051269-30S	3051269-30S	3051269-30S	3051269-30S	3051269-30S	Purge Valve Tubing to Drain
17.	9051541-01	9051541-01	9051541-01	9051541-01	9051541-01	Purge Valve Tube to Inlet Outlet Bracket
18.	9051739-01	9051739-01	9051739-01	9051739-01	9051739-01	Inlet Outlet Bracket
19.		1051223-03	1051223-03	1051223-03	1051223-03	Evaporator-FULL Cube = 7/8 x 7/8 x 7/8
		1051223-04	1051223-04	1051223-04	1051223-04	Evaporator-HALF Cube = 3/8 x 7/8 x 7/8
20.	9051270-36	9051270-36	9051270-36	9051270-36	9051270-36	Water Inlet Valve to Inlet Outlet Bracket Tube
21.	1051223-01					Evaporator-FULL Cube = 7/8 x 7/8 x 7/8
	1051223-02					Evaporator-HALF Cube = 3/8 x 7/8 x 7/8

 © 2018, Cornelius Inc.

NOTE: * = Represent Condenser Type and Cube Size Refer page 1 for more details.

220-240/50/1 Machine Voltage					
Item No.	Model Number				Description
	CNM0330**5	CNM0430**5	CNM0530**5	CNM0630**5	
1.	9051736-01	9051736-01	9051736-01	9051736-01	Lower Curtain Assembly
2.	9051726-01	9051726-02	9051726-02	9051726-02	Evaporator Cover
3.	9021010-05	9021010-05	9021010-05	9021010-05	Hose Clamp, Plastic
4.	9051766-01	9051766-01	9051766-01	9051766-01	Water Distribution Tube Assembly
5.	9051749-01	9051749-02	9051749-02	9051749-02	Water Tube, Upper
6.	9091177-01	9091177-01	9091177-01	9091177-01	Coupler, Straight, 5/8 I.D. Tubing
7.	9051748-01	9051748-01	9051748-01	9051748-01	Water Tube, Sump
8.	9051737-01	9051737-01	9051737-01	9051737-01	Sump/Water Trough
9.	2062336-02	2062336-02	2062336-01	2062336-02	Water Pump
10.	9041105-05	9041105-05	9041105-05	9041105-05	Purge Valve
11.	9051738-01	9051738-01	9051738-01	9051738-01	Top Cover
12.	9041108-01	9041108-02	9041108-01	9041108-02	Water Inlet Valve
13.	9091140-01	9091140-01	9091140-01	9091140-01	Drain Fitting
14.	9021010-04	9021010-04	9021010-04	9021010-04	Hose Clamp, Plastic
15.	1051224-01	1051224-01	1051224-01	1051224-01	Float Switch Assembly (Includes Instructions)
16.	3051269-30S	3051269-30S	3051269-30S	3051269-30S	Purge Valve Tubing to Drain
17.	9051541-01	9051541-01	9051541-01	9051541-01	Purge Valve Tube to Inlet Outlet Bracket
18.	9051739-01	9051739-01	9051739-01	9051739-01	Inlet Outlet Bracket
19.		1051223-03	1051223-03	1051223-03	Evaporator-FULL Cube = 7/8 x 7/8 x 7/8
		1051223-04	1051223-04	1051223-04	Evaporator-HALF Cube = 3/8 x 7/8 x 7/8
20.	9051270-36	9051270-36	9051270-36	9051270-36	Water Inlet Valve to Inlet Outlet Bracket Tube
21.	1051223-01				Evaporator-FULL Cube = 7/8 x 7/8 x 7/8
	1051223-02				Evaporator-HALF Cube = 3/8 x 7/8 x 7/8

© 2018, Cornelius Inc.

Publication Number: 548000034

AIR COOLED PART LIST

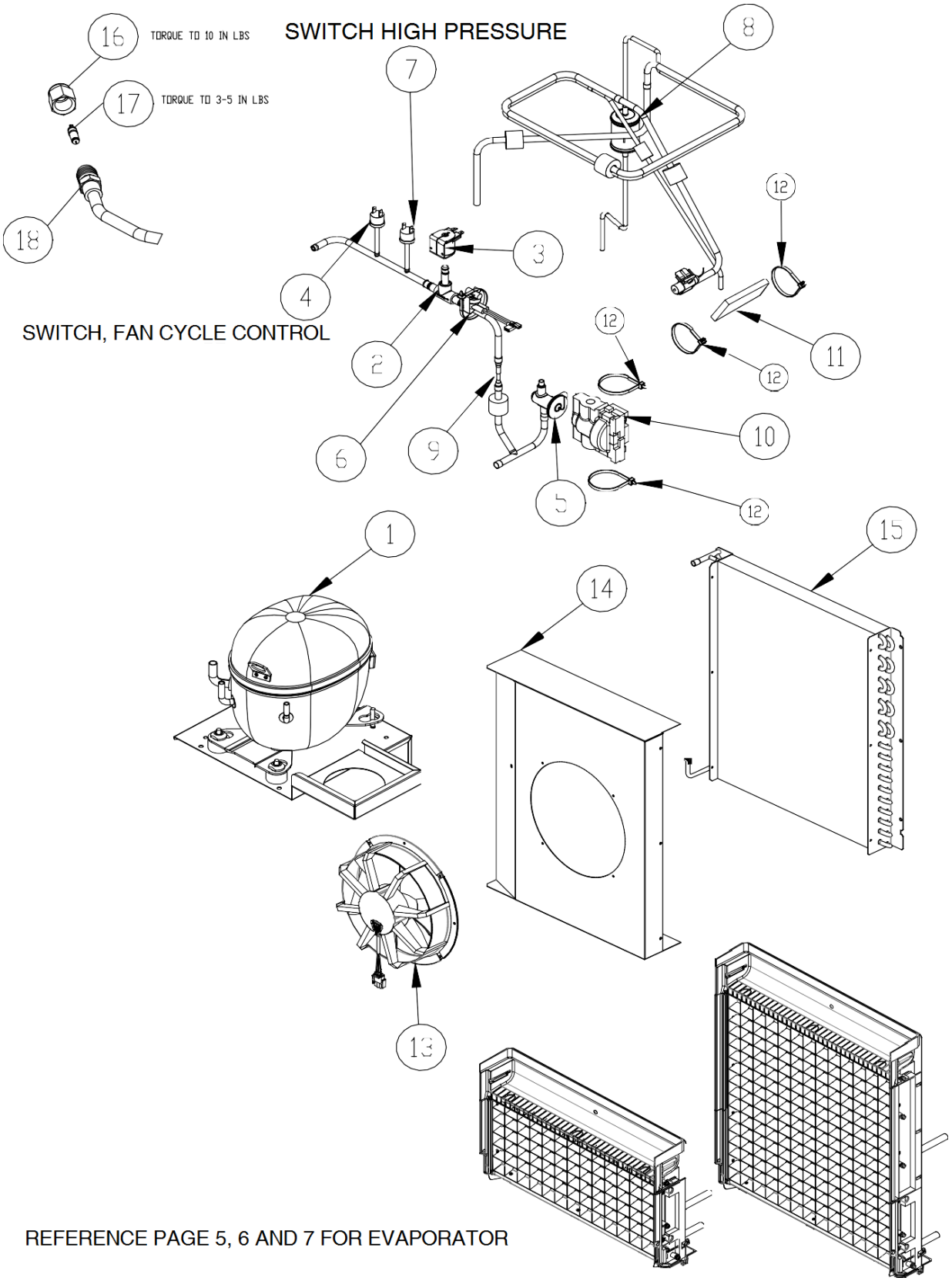

Figure 3.

 © 2018, Cornelius Inc.

NOTE: * = Ice Cube Size Refer page 1 for more details.

Item No.	Model Number					Description
	CNM0330A*0	CNM0430A*0	CNM0430A*6	CNM0530A*0	CNM0630A*6	
	115/60/1	115/60/1	208-230/60/1	115/60/1	208-230/60/1	Machine Voltage
1.	9181163-101	9181163-101	9181164-101	9181137-11B	9181145-11A	Compressor Kit
2.	9151192-03	9151192-03	9151192-03	9151192-01	9151192-01	Hot Gas Valve Body
3.	9151193-01	9151193-01	9151193-02	9151193-01	9151193-02	Hot Gas Valve Coil
4.	9041106-01	9041106-01	9041106-01	9041106-01	9041106-01	Switch, Fan Cycle
5.	9151154-101	9151149-101	9151149-101	9151149-101	9151149-101	TXV
6.	9041098-02	9041098-02	9041098-02	9041098-02	9041098-02	High Temp Switch
7.	9041111-01	9041111-01	9041111-01	9041111-01	9041111-01	Switch, High Pressure
8.	9151163-01	9151163-01	9151163-01	9151163-01	9151163-01	Drier (Included in Compressor Kit)
9.	9091179-01	9091179-01	9091179-01	9091179-01	Not Used	Restrictor
10.	9131544-01	9131544-01	9131544-01	9131544-01	9131544-01	Insulation, TXV
11.	9131143-07	9131143-07	9131143-07	9131143-07	9131143-07	Insulation, Bulb
12.	9021021-01	9021021-01	9021021-01	9021021-01	9021021-01	Cable Tie-For TXV and Bulb Insulation
13.	9161135-01	9161135-01	9161135-02	9161135-01	9161135-02	Fan Motor Assembly
14.	3013639-01	3013639-01	3013639-01	3013639-01	3013639-01	Fan Shroud
15.	9141152-01	9141152-01	9141152-01	9141152-01	9141152-01	Condenser
16.	9091086-03	9091086-03	9091086-03	9091086-03	9091086-03	Service Valve Cap
17.	9091086-02	9091086-02	9091086-02	9091086-02	9091086-02	Service Valve Core
18.	9091086-01	9091086-01	9091086-01	9091086-01	9091086-01	Service Valve Stem

CNM0330A*0	CNM0430A*0	CNM0430A*6	CNM0530A*0	CNM0630A*6	Starting Components (Included in Comp Kit)
9181163-101	9181163-101	9181164-101	9181137-11B	9181145-11A	Compressor Kit
9181003-50	9181003-50	9181003-26	9181003-50	9181003-52	Start Capacitor
9181009-25	9181009-25	9181009-08	9181009-25	9181009-19	Run Capacitor
9181010-33	9181010-33	9181010-27	9181010-14	9181010-27	Compressor Relay
9181005-49	9181005-49	9181005-50	9181005-45	Internal	Overload

© 2018, Cornelius Inc.

Publication Number: 548000034

NOTE: * = Ice Cube Size Refer page 1 for more details.

220-240/50/1 Machine Voltage					
Item No.	Model Number				Description
	CNM0330A*5	CNM0430A*5	CNM0530A*5	CNM0630A*5	
1.	9181165-101	9181138-11A	9181166-11	9181147-11	Compressor Kit
2.	9151192-03	9151192-03	9151192-01	9151192-01	Hot Gas Valve Body
3.	9151193-02	9151193-02	9151193-02	9151193-02	Hot Gas Valve Coil
4.	9041106-01	9041106-01	9041106-01	9041106-01	Switch, Fan Cycle
5.	9151154-101	9151149-101	9151149-101	9151149-101	TXV
6.	9041098-02	9041098-02	9041098-02	9041098-02	High Temp Switch
7.	9041111-01	9041111-01	9041111-01	9041111-01	Switch, High Pressure
8.	9151163-01	9151163-01	9151163-01	9151163-01	Drier (Included in Compressor Kit)
9.	9091179-01	9091179-01	9091179-01	Not Used	Restrictor
10.	9131544-01	9131544-01	9131544-01	9131544-01	Insulation, TXV
11.	9131143-07	9131143-07	9131143-07	9131143-07	Insulation, Bulb
12.	9021021-01	9021021-01	9021021-01	9021021-01	Cable Tie-For TXV and Bulb Insulation
13.	9161135-02	9161135-02	9161135-02	9161135-02	Fan Motor Assembly
14.	3013639-01	3013639-01	3013639-01	3013639-01	Fan Shroud
15.	9141152-01	9141152-01	9141152-01	9141152-01	Condenser
16.	9091086-03	9091086-03	9091086-03	9091086-03	Service Valve Cap
17.	9091086-02	9091086-02	9091086-02	9091086-02	Service Valve Core
18.	9091086-01	9091086-01	9091086-01	9091086-01	Service Valve Stem

CNM0330A*5	CNM0430A*5	CNM0530A*5	CNM0630A*5	Starting Components (Included in Comp Kit)
9181165-101	9181138-11A	9181166-11	9181147-11	Compressor Kit
9181003-54	9181003-32	9181003-32	9181003-54	Start Capacitor
9181009-26	9181009-26	9181009-28	9181009-17	Run Capacitor
9181010-27	9181010-32	9181010-34	9181010-01	Compressor Relay
9181005-50	9181005-46	9181005-51	Internal	Overload

 © 2018, Cornelius Inc.

WATER COOLED PART LIST

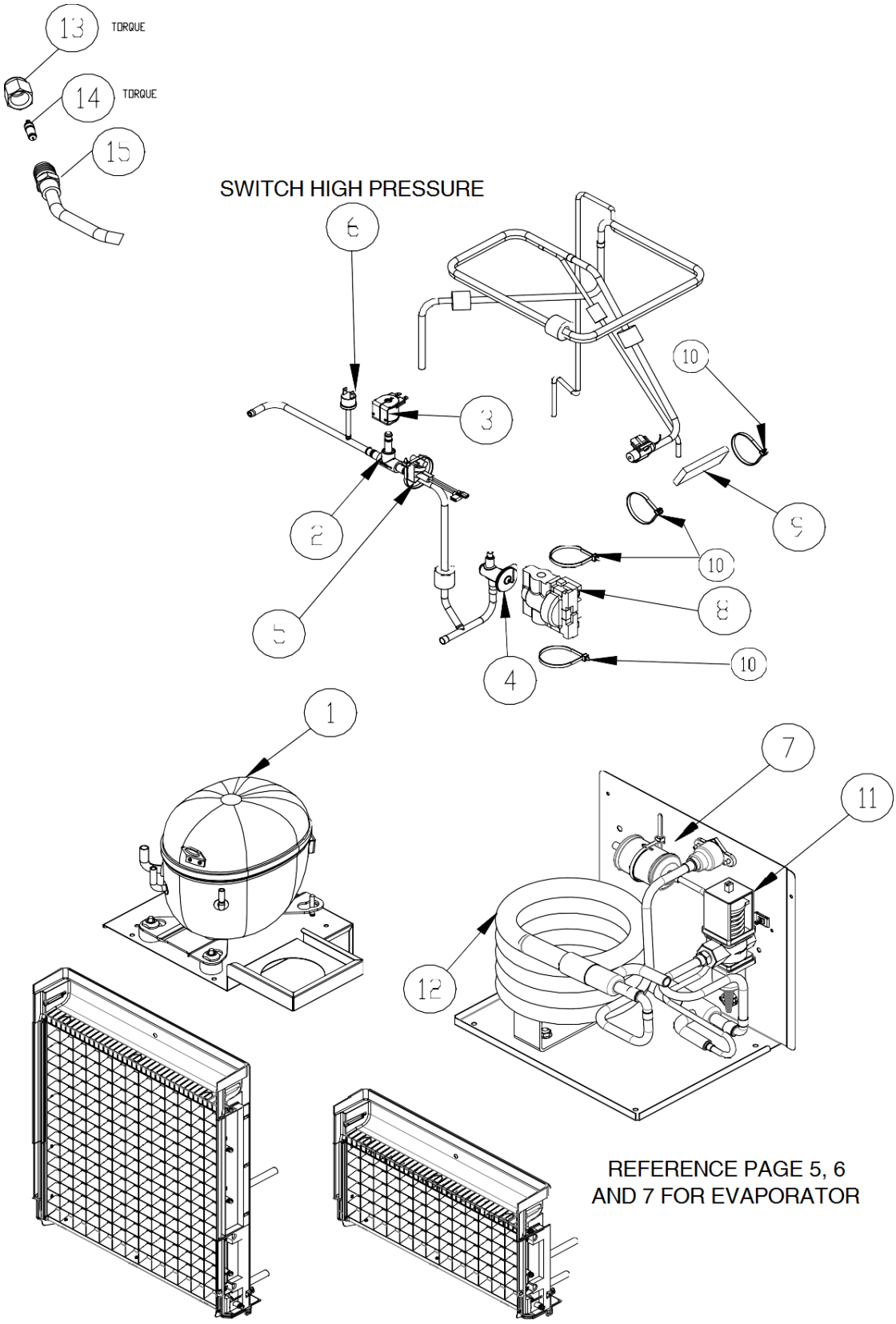

Figure 4.

NOTE: * = Ice Cube Size Refer page 1 for more details.

Item No.	Model Number					Description
	CNM0330W*0	CNM0430W*0	CNM0430W*6	CNM0530W*0	CNM0630W*6	
	115/60/1	115/60/1	208-230/60/1	115/60/1	208-230/60/1	Machine Voltage
1.	9181163-101	9181163-101	9181164-101	9181137-11B	9181145-11A	Compressor Kit
2.	9151192-03	9151192-03	9151192-03	9151192-03	9151192-03	Hot Gas Valve Body
3.	9151193-01	9151193-01	9151193-02	9151193-01	9151193-02	Hot Gas Valve Coil
4.	9151154-101	9151149-101	9151149-101	9151149-101	9151149-101	TXV
5.	9041098-02	9041098-02	9041098-02	9041098-02	9041098-02	High Temp Switch
6.	9041111-01	9041111-01	9041111-01	9041111-01	9041111-01	Switch, High Pressure
7.	9151163-01	9151163-01	9151163-01	9151163-01	9151163-01	Drier (Included in Compressor Kit)
8.	9131544-01	9131544-01	9131544-01	9131544-01	9131544-01	Insulation, TXV
9.	9131143-07	9131143-07	9131143-07	9131143-07	9131143-07	Insulation, Bulb
10.	9021021-01	9021021-01	9021021-01	9021021-01	9021021-01	Cable Tie-For TXV and Bulb Insulation
11.	9051104-01	9051104-01	9051104-01	9051104-01	9051104-01	Water Regulator
12.	9141156-01	9141156-01	9141156-01	9141156-01	9141156-01	Condenser
13.	9091086-03	9091086-03	9091086-03	9091086-03	9091086-03	Service Valve Cap
14.	9091086-02	9091086-02	9091086-02	9091086-02	9091086-02	Service Valve Core
15.	9091086-01	9091086-01	9091086-01	9091086-01	9091086-01	Service Valve Stem

CNM0330A*0	CNM0430A*0	CNM0430A*6	CNM0530A*0	CNM0630A*6	Starting Components (Included in Comp Kit)
9181163-101	9181163-101	9181164-101	9181137-11B	9181145-11A	Compressor Kit
9181003-50	9181003-50	9181003-26	9181003-50	9181003-52	Start Capacitor
9181009-25	9181009-25	9181009-08	9181009-25	9181009-19	Run Capacitor
9181010-33	9181010-33	9181010-27	9181010-14	9181010-27	Compressor Relay
9181005-49	9181005-49	9181005-50	9181005-45	Internal	Overload

 © 2018, Cornelius Inc.

NOTE: * = Ice Cube Size Refer page 1 for more details.

220-240/50/1 Machine Voltage			
Item No.	Model Number		Description
	CNM0530W*5	CNM0630W*5	
1.	9181166-11	9181147-11	Compressor Kit
2.	9151192-03	9151192-03	Hot Gas Valve Body
3.	9151193-02	9151193-02	Hot Gas Valve Coil
4.	9151149-101	9151149-101	TXV
5.	9041098-02	9041098-02	High Temp Switch
6.	9041111-01	9041111-01	Switch, High Pressure
7.	9151163-01	9151163-01	Drier (Included in Compressor Kit)
8.	9131544-01	9131544-01	Insulation, TXV
9.	9131143-07	9131143-07	Insulation, Bulb
10.	9021021-01	9021021-01	Cable Tie-For TXV and Bulb Insulation
11.	9051104-01	9051104-01	Water Regulator
12.	9141156-01	9141156-01	Condenser
13.	9091086-03	9091086-03	Service Valve Cap
14.	9091086-02	9091086-02	Service Valve Core
15.	9091086-01	9091086-01	Service Valve Stem

CNM0530A*5	CNM0630A*5	Starting Components (Included in Comp Kit)
9181166-11	9181147-11	Compressor Kit
9181003-32	9181003-54	Start Capacitor
9181009-28	9181009-17	Run Capacitor
9181010-34	9181010-01	Compressor Relay
9181005-51	Internal	Overload

REMOTE PART LIST

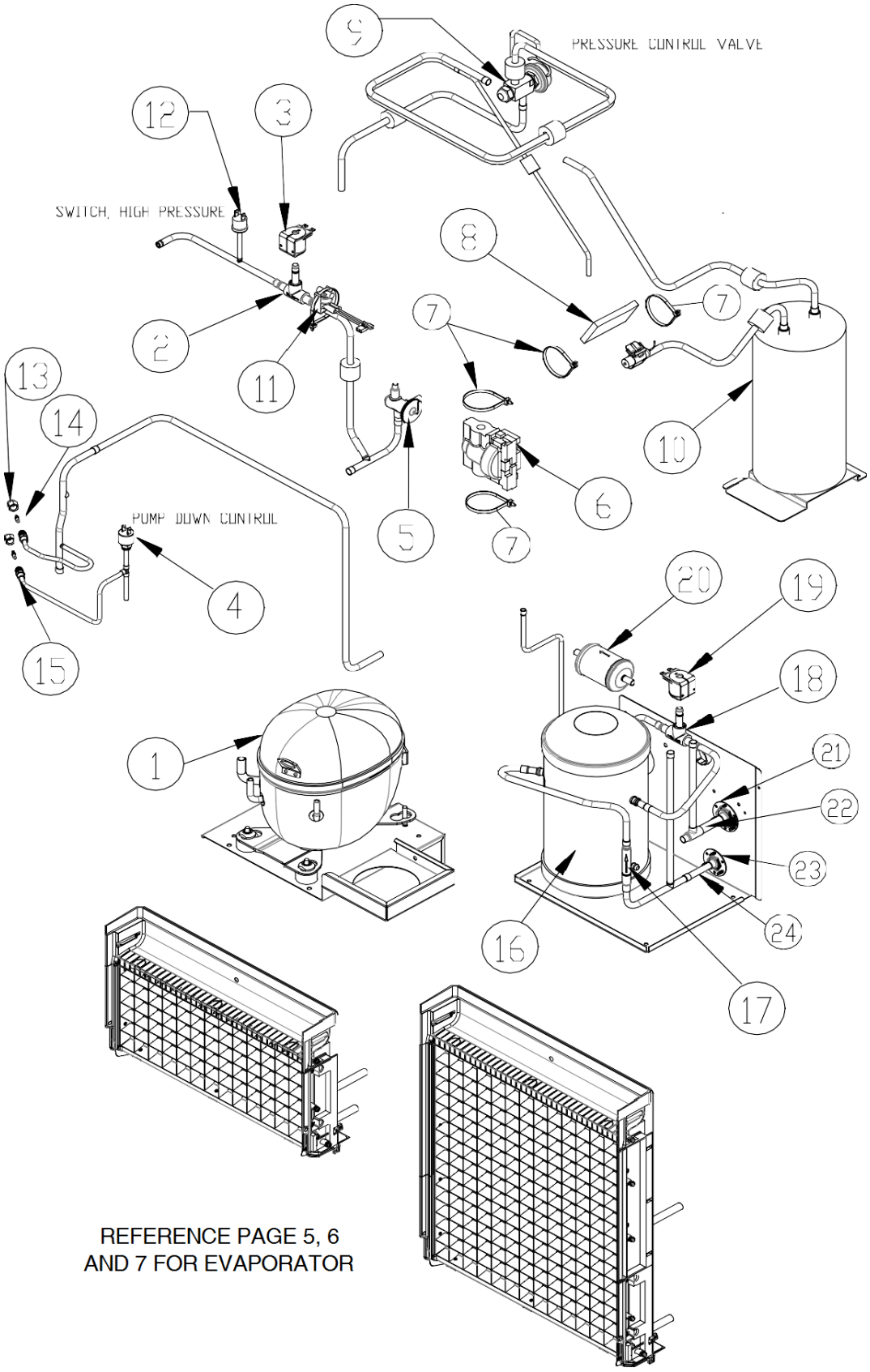

Figure 5.

 © 2018, Cornelius Inc.

NOTE: * = Ice Cube Size Refer page 1 for more details.

Item No.	Model			Description
	CNM0530R*0	CNM0530R*5	CNM0630R*6	
	115/60/1	220-240/50/1	208-230/60/1	Machine Voltage
1.	9181137-11B	9181166-11	9181145-11A	Compressor Kit
2.	9151192-01	9151192-01	9151192-01	Hot Gas Valve Body
3.	9151193-01	9151193-02	9151193-02	Hot Gas Valve Coil
4.	9041092-02	9041092-02	9041092-02	Pump Down Control
5.	9151149-101	9151149-101	9151149-101	TXV
6.	9131544-01	9131544-01	9131544-01	Insulation, TXV
7.	9021025-01	9021025-01	9021025-01	Cable Tie-For TXV and Bulb Insulation
8.	9131143-07	9131143-07	9131143-07	Insulation TXV Bulb
9.	9151146-01	9151146-01	Not Used	Pressure Control Valve
10.	9151071-01	9151071-01	Not Used	Accumulator
11.	9041098-02	9041098-02	9041098-02	High Temp Switch
12.	9041111-01	9041111-01	9041111-01	Switch, High Pressure
13.	9091086-03	9091086-03	9091086-03	Service Valve Cap
14.	9091086-02	9091086-02	9091086-02	Service Valve Core
15.	9091086-01	9091086-01	9091086-01	Service Valve Stem
16.	9151074-01	9151074-01	9151074-01	Receiver
17.	9151139-01	9151139-01	9151139-01	Check Valve
18.	9151192-02	9151192-02	9151192-02	Liquid Line Solenoid
19.	9151193-01	9151193-02	9151193-02	Liquid Line Coil
20.	9151163-03	9151163-03	9151163-03	Drier (Included in Compressor Kit)
21.	9091001-09	9091001-09	9091001-09	1/2 Inch Coupling Flange (Large)
22.	9091001-12	9091001-12	9091001-12	1/2 Inch Coupling (Large)
23.	9091001-03	9091001-03	9091001-03	3/8 Inch Coupling Flange (Small)
24.	9091001-11	9091001-11	9091001-11	3/8 Inch Coupling (Small)

CNM0530R*0	CNM0530A*5	CNM0630R*6	Starting Components (Included in Comp Kit)
9181137-11B	9181166-11	9181145-11A	Compressor Kit
9181003-50	9181003-32	9181003-52	Start Capacitor
9181009-25	9181009-28	9181009-19	Run Capacitor
9181010-14	9181010-34	9181010-27	Potential Relay
9181005-45	9181005-51	Internal	Overload

© 2018, Cornelius Inc.

ELECTRICAL PART LIST

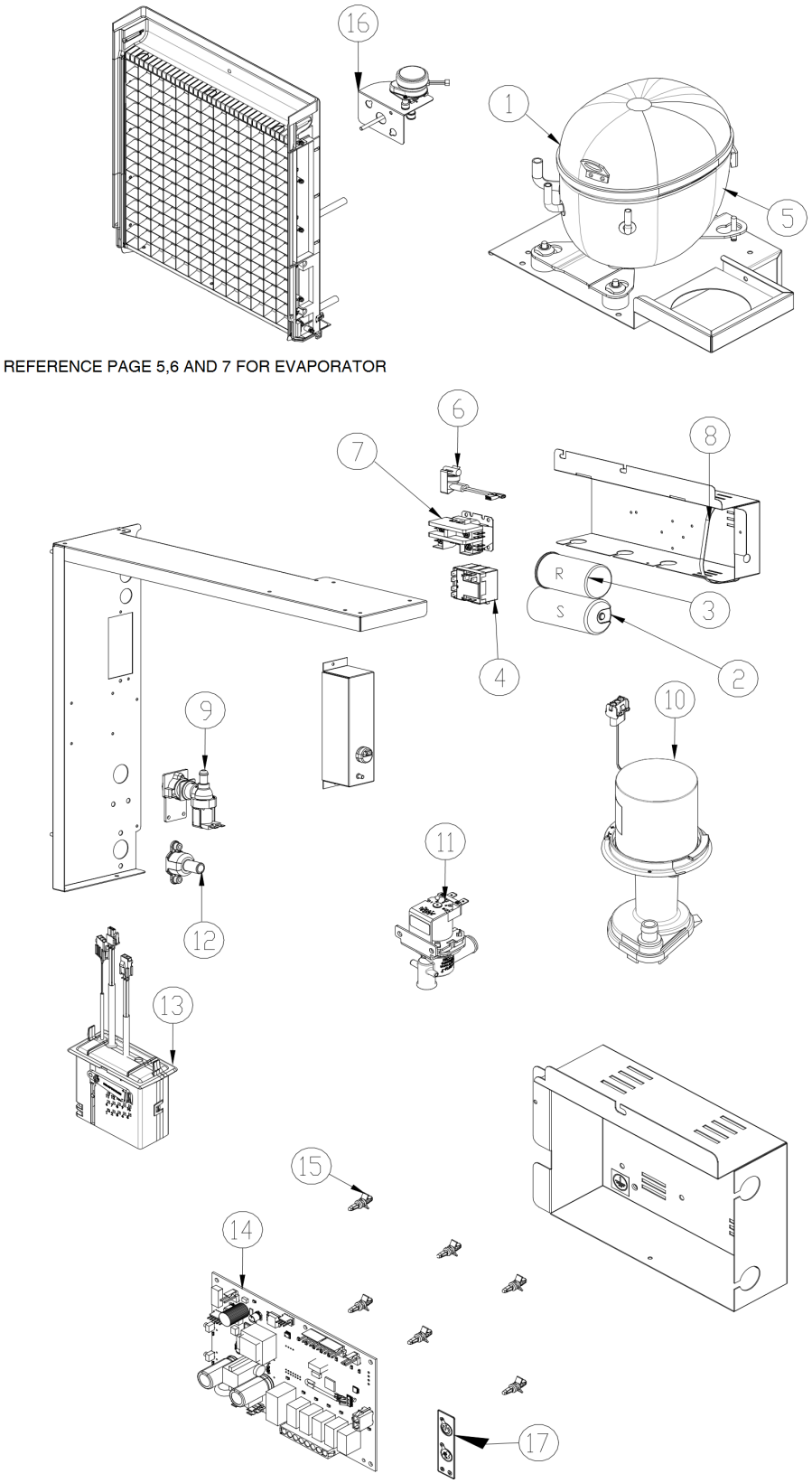

Figure 6.

 © 2018, Cornelius Inc.

NOTE: * = Ice Cube Size Refer page 1 for more details.

Item No.	Model Number					Description
	CNM0330A*0	CNM0430A*0	CNM0430A*6	CNM0530A*0	CNM0630A*6	
	115/60/1	115/60/1	208-230/60/1	115/60/1	208-230/60/1	Machine Voltage
1.	9181163-101	9181163-101	9181164-101	9181137-11B	9181145-11A	Compressor
2.	9181003-50	9181003-50	9181003-26	9181003-50	9181003-52	Start Capacitor
3.	9181009-25	9181009-25	9181009-08	9181009-25	9181009-19	Run Capacitor
4.	9181010-33	9181010-33	9181010-27	9181010-14	9181010-27	Potential Relay
5.	9181005-49	9181005-49	9181005-50	9181005-45	Internal	Overload
6.	9041098-02	9041098-02	9041098-02	9041098-02	9041098-02	Switch, High Temp
7.	9101002-07	9101002-07	9101002-06	9101002-07	9101002-06	Contactor
8.	9021096-01	9021096-01	9021096-01	9021096-01	9021096-01	Cable Tie, Metal
9.	9041108-01	9041108-01	9041108-02	9041108-01	9041108-02	Valve, Water Inlet
10.	2062336-01	2062336-01	2062336-02	2062336-01	2062336-02	Water Pump
11.	9041105-04	9041105-04	9041105-05	9041105-04	9041105-05	Purge Valve
12.	9091140-01	9091140-01	9091140-01	9091140-01	9091140-01	Purge Drain
13.	1051224-01	1051224-01	1051224-01	1051224-01	1051224-01	Float Switch Assembly (Includes Instructions)
14.	9101368-02	9101368-02	9101368-02	9101368-02	9101368-02	BoardDual Voltage
15.	9051698-01P	9051698-01P	9051698-01P	9051698-01P	9051698-01P	Plastic Standoff, Control Board (Pkg of 10)
16.	9161134-01	9161134-01	9161134-02	9161134-01	9161134-02	Harvest Assist
17.	9101394-01	9101394-01	9101394-01	9101394-01	9101394-01	Membrane Switch (ON-OFF) (Includes Cable)
18.	9101379-01	9101379-01	9101379-01	9101379-01	9101379-01	Switch, Magnetic Reed (Bin Control On Evap)

220-240/50/1 Machine Voltage					
Item No.	Model Number				Description
	CNM0330A*5	CNM0430A*5	CNM0530A*5	CNM0630A*5	
1.	9181165-101	9181138-11A	9181166-11	9181147-11	Compressor Kit
2.	9181003-54	9181003-32	9181003-32	9181003-54	Start Capacitor
3.	9181009-26	9181009-26	9181009-28	9181009-17	Run Capacitor
4.	9181010-27	9181010-32	9181010-34	9181010-01	Compressor Relay
5.	9181005-50	9181005-46	9181005-51	Internal	Overload
6.	9041098-02	9041098-02	9041098-02	9041098-02	Switch, High Temp
7.	9101002-06	9101002-06	9101002-06	9101002-06	Contactor
8.	9021096-01	9021096-01	9021096-01	9021096-01	Cable Tie, Metal
9.	9041108-02	9041108-02	9041108-02	9041108-02	Valve, Water Inlet
10.	2062336-02	2062336-02	2062336-02	2062336-02	Water Pump
11.	9041105-05	9041105-05	9041105-05	9041105-05	Purge Valve
12.	9091140-01	9091140-01	9091140-01	9091140-01	Purge Drain
13.	1051224-01	1051224-01	1051224-01	1051224-01	Float Switch Assembly (Includes Instructions)
14.	9101368-02	9101368-02	9101368-02	9101368-02	BoardDual Voltage
15.	9051698-01P	9051698-01P	9051698-01P	9051698-01P	Plastic Standoff, Control Board (Pkg of 10)
16.	9161134-02	9161134-02	9161134-02	9161134-02	Harvest Assist
17.	9101394-01	9101394-01	9101394-01	9101394-01	Membrane Switch (ON-OFF) (Includes Cable)
18.	9101379-01	9101379-01	9101379-01	9101379-01	Switch, Magnetic Reed (Bin Control On Evap)

© 2018, Cornelius Inc.

Publication Number: 548000034

 © 2018, Cornelius Inc.

Cornelius Inc.
www.cornelius.com